NOTICE OF MEETING

VILLAGE OF FOX POINT
PLAN COMMISSION

SCHWEMER HALL - MUNICIPAL BLDG.
7200 N. SANTA MONICA BLVD
FOX POINT, WI 53217

Monday
March 3, 2025
5:45 P.M.

NOTE: the Plan Commission will be meeting in person at Village Hall, with a remote attendance option, per the hybrid meeting procedures further described in section 19-32 d. Of the Village code. This meeting is open to all citizens in person at Village Hall, or through the Zoom participant information shown below, subject to the following: no assurance is provided to those Plan Commission members and citizens intending to attend remotely that the technology will perform sufficiently to allow for their participation and the meeting will proceed regardless. Public officials and citizens wishing to ensure they can participate are encouraged to attend in person. Citizens are encouraged to submit any comments in writing in advance of the meeting to the Village Manager at sbotcher@villageoffoxpoint.com

Zoom Participant Information
https://us02web.zoom.us/j/89048465030
Dial: (312) 626-6799
Meeting ID: 890 4846 5030

AGENDA

1. **Roll Call.**

2. **Approval of the minutes of the February 3, 2025 Plan Commission meeting.**

3. **Consideration of Conditional Use Permit for Nino's Southern Sides, 8775 N Port Washington Road to Operate a Restaurant**

   The Plan Commission will discuss and may make a recommendation to the Village Board concerning a conditional use application to operate a restaurant at 8775 N Port Washington Road.

4. **Adjourn.**

NEXT PLAN COMMISSION MEETING: Monday, April 7, 2025

PLEASE NOTE: Upon reasonable notice, efforts will be made to accommodate the needs of disabled individuals through sign language interpreters or other auxiliary aids. For additional information or to request these services, contact the Village Clerk at 351-8900. It is possible that members of, and possibly a quorum of members of, other governmental bodies of the municipality may be in attendance at the above stated meeting to gather information; no action will be taken by any governmental body at the above stated meeting other than the governmental body specifically referred to above in this notice.

Published and Posted February 25, 2025

VILLAGE OF FOX POINT
PLAN COMMISSION MEETING MINUTES
February 3, 2025

A meeting of the Fox Point Plan Commission was held on Monday, February 3, 2025. Commissioner Symchych called the meeting to order at 5:45 p.m. and noted there was a quorum of Plan Commission members present.

The Plan Commission roll call was taken by Village Deputy Clerk Teri Repins:

Plan Commission: President Christine Symchych, Chairman
Eric Fonstad, Commissioner – via Zoom
Robert Smith, Commissioner
Ted Durant, Commissioner
Jay Craig, Commissioner
William Langhoff, Commissioner
Jake Wilson, Commissioner - absent

Staff present included Village Manager Scott Botcher, Village Attorney Eric Larson (via Zoom) and Deputy Clerk Teri Repins.

Notice of the meeting was provided to the North Shore Now as necessary, and to all others as required by State open meetings laws and posted on the official bulletin board at 7200 N Santa Monica Boulevard, as well as the village website at www.villageoffoxpoint.com, as per 2015 Wisconsin Act 79 and as described in Village Ordinance Chapter 116-2, 116-2(C).

Approval of the Minutes of the January 6, 2025 Plan Commission Meeting

Motion by President Symchych, seconded by Commissioner Durant, and carried unanimously with a roll call vote 6 - 0, the Commission approved the minutes of the January 6, 2025 Plan Commission meeting.

Review and Recommendation RE: Land Division at 1406 East Fox Lane, Fox Point.

Motion by President Symchych, seconded by Commissioner Langhoff and carried unanimously by roll call vote 6 - 0, the Commission recommended the Village Board approve the proposed land division at 1406 East Fox Lane, Tax Key No. 0580005001. In addition, the preliminary CSM is to be approved as final.

Adjourn

On motion of President Symchych, seconded by Commissioner Durant and carried unanimously by roll call vote 6 - 0 the Plan Commission meeting adjourned at 5:50 PM.

Respectfully,

Teri Repins
Deputy Clerk

Published and Posted:

DRAFT

VILLAGE OF FOX POINT

MILWAUKEE COUNTY

WISCONSIN

VILLAGE HALL
7200 N. SANTA MONICA BLVD.
FOX POINT WI 53217-3505
414-351-8900
FAX 414-351-8909

To: Plan Commission

From: Kevin Ausman, Assistant Village Manager

CC: Scott Botcher, Village Manager

Date: March 3, 2025

Re: Nino's Southern Sides - CUP

Overview

V&J Foods has applied for conditional use approval under Section 745-18D(1)(h) to allow a restaurant, Nino's Southern Sides, to operate at 8775 N Port Washington Road in the D Business District. The proposed tenant space is located in the Riverpoint Shopping Center.

Background

The proposed tenant space has been vacant since previous tenant, Cosi, another restaurant closed. The applicant has included plans for interior build-out of the tenant space.

Request

Restaurants are considered a conditional use request in the D Business District under Section 745-18D(1)(h) of the Fox Point Municipal Code. The applicant has noted hours of operation in their submittal documents of 9AM – 8PM Sunday through Saturday. The Village DPW Director has reviewed the application and determined sufficient parking within the Riverpoint Shopping Center to accommodate the restaurant patrons.

The applicant has indicated the operators intend to offer seasonal outdoor seating. The Plan Commission may wish to discuss outdoor seating hours.

Recommendation

Staff recommends that the Plan Commission recommend that the Village Board approve the conditional use request following a mandatory public hearing.

STATE OF WISCONSIN VILLAGE OF FOX POINT MILWAUKEE COUNTY

NOTICE

PLEASE BE ADVISED: Chapter 67, Article III of the Village of Fox Point Village Code is attached hereto and incorporated herein. Pursuant to this Ordinance, the Village of Fox Point Village Board has determined that whenever the services of the Village Attorney, Village Engineer, Village Forester or any other of the Village's professional staff (internal or independently contracted) results in a charge to the Village for that professional's time and services and such service is not a service supplied to the Village as a whole, the Village Treasurer shall charge the property owner for the fees incurred by the Village. Also be advised that pursuant to the Village of Fox Point Municipal Code certain other fees, costs and charges are the responsibility of the property owner making application to the Village.

I, the undersigned, have been advised that, pursuant to the Village Fox Point Village Code, if the Village Attorney, Village Engineer, Village Forester or any other Village professional (internal or independently contracted) provides services to the Village as a result of my activities, whether at my request or at the request of the Village, I shall be responsible for the fees incurred by the Village. Also I have been advised that pursuant to the Village of Fox Point Village code certain other fees, costs and charges are my responsibility.

Dated this 11 day of FEBRUARY, 2025

AMSHA MIRMANWOOD
MIDLAND MGMT LLC
AS AGENT FOR THE OWNER

Signature of Property Owner

North Shore Centers Partners

Name of Property Owner - PRINTED

Mailing Address of Property Owner:

C/O Midland Management, LLC
555 West Brown Deer Road #220
Milwaukee, WI 53217

Tax Key No. of Property: unknown right now

Address of Property: 8775 N Port Washington Road

Fox Point, WI 53217

For Village Use Only:

□ Original kept on file with Village Clerk.

□ Copy provided to Property Owner.

Signature: _____

Updated 01/24/2024

VILLAGE OF FOX POINT

VILLAGE OF FOX POINT
APPLICATION FOR CONDITIONAL USE PERMIT

Section 1

Trade Name of Business	Phone #	Name of former tenant (if known)
Nino's Southern Sides	414-365-9003	
Fox Point Business Address: 8775 N Port Washington Road Fox Point, WI 53217		
Email: jcarter@wjfoods.com	Contact Person: Jeff Carter	

If the business is a limited liability corporation (LLC) or corporation, complete the following section. If not, skip to next section.

Section 2

Legal name of corporation or LLC	Corporate email
Nino's Southern Sides	tweissa@wjfoods.com
Corporate headquarters address: 6933 W Brown Deer Road Milwaukee, WI 53223	Corporate phone #: 414-365-9003
Name and addresses of all corporate officers: Valerie Daniels Carter, John Daniels > same address above	
Name of corporate agent: Valerie Daniels Carter	Address of corporate agent: 6933 W Brown Deer Road Milwaukee, WI 53223

If applicant(s) is a sole proprietorship (individual) or partnership, please complete the following section.

Section 3

List the name, home address, business address, and phone numbers of all applicants and owners.

Name	Home address	Business address	Phone #
Valerie Daniels Carter	1220 E Dorges Ct Bayside, WI 53217	6933 W. Brown Deer Rd Milwaukee, WI	(414)365-9003

All applicants must complete the following section.

Fee Paid:_____Receipt No. _____

Updated 01/24/2024

VILLAGE OF FOX POINT
APPLICATION FOR CONDITIONAL USE PERMIT

FOR OFFICE USE ONLY

Has sufficient site plan been submitted? (If not, what is needed?) _____

What is the category of proposed use? "D" BUSINESS DISTRICT – RESTAURANT MA 2-13-25

Does the parking meet code requirements? PART OF AN EXISTING FACILITY WHERE THESE REQUIREMENTS HAVE

Is there proper exterior lighting? BEEN PREVIOUSLY ADDRESSED. SD 02/19/25

Are there any existing code violations? N/A MA 2-13-25

Additional Comments? No to-go order pickup cars may park in fire lane

Applicants not making substantial changes to their tenancy of Riverpoint Village, Audubon Court Shopping Center, or Fox Point Shops do not need approval from the Director of Public Works as parking and lighting plans for these shopping centers have already been approved.

Letter of Consent received from owner? 2/24/25
Comments/Date

Date application/materials received: _____

Updated 01/24/2024

VILLAGE OF FOX POINT

MILWAUKEE COUNTY

WISCONSIN

VILLAGE HALL
7200 N. SANTA MONICA BLVD.
FOX POINT WI 53217-3505
414-351-8900
FAX 414-351-8909
www.villageoffoxpoint.com

APPLICATION FOR CONDITIONAL USE PERMIT DIRECTIONS

GENERAL INFORMATION:

All new businesses locating in an area zoned D-Business must apply for a Conditional Use Permit under Section 745-18D of the Village Code. Certain exceptions apply, see Section 745-18C of the Village Code

Changes in ownership, changes in use, changes in operations, changes in permitted conditions, alterations, and relocations within the Village to businesses with existing Conditional Use Permits may necessitate obtaining an amended Conditional Use Permit.

TO APPLY FOR A PERMIT:

1. Complete all the information on the attached application. Please type or print. Attach additional pages if necessary. **Applications with incomplete information will not be accepted.**

2. All materials must be submitted on 8.5" x 11" paper. If larger scale plans are necessary for clarity, please bring to the Plan Commission meeting. (**Note:** All documents submitted will be in copied in black and white.)

3. A $300 non-refundable fee must accompany this application.

4. A letter of approval from the owner of the property must accompany this application, unless the applicant is the owner. The letter should be:
   - on the owner's letterhead including the owner's original signature,
   - addressed to the Village, and
   - reference the proposed address and name of the business.

   The Village will not entertain any requests without the written consent of the owners.

5. A signed Charge Back Form as described in Chapter 67, Article III of the Village Code must accompany this application.

6. The application and one set of the site plans and all related materials must be submitted by **4:00 pm on the second Wednesday** prior to the Plan Commission meeting.

7. Completed applications will be submitted by staff to the Plan Commission for consideration. The Plan Commission meets on the first Monday of each month at 5:45 p.m. PLEASE NOTE: Applicants are required to attend the Plan Commission meeting to discuss their Application.

8. The Village Board will consider the Plan Commission's recommendation at the Board meeting on the second Tuesday of the month at 7:00 p.m. Applicants should also plan to attend the Village Board meeting.

9. The owner is responsible for obtaining other necessary permits and/or approvals, including but not limited to, the North Shore Fire Department's Plan Review and Submittal Requirements.

Updated 01/24/2024

NOTE: The following information must be submitted for Village approval <u>when proposing a new building or building addition</u>:

1. Description of the project
2. Landscape plan
3. Plat of survey
4. Parking plan (including parking computations) per Chapter 14 of the Fox Point Village Code
5. Drainage plan (including drainage computations)
6. Lighting plan (including photometrics)
7. Traffic plan
8. Proposed location and connection to the sanitary sewer and water mains
9. All elevations
10. Floor plans
11. Any additional information as determined by Village staff

Section 4

Applicant's specific interest in site Operating a Restaurant		
Describe in detail the business activity that will take place on site including products & services Opening a rest aurant called Ninos Southern Sides will be selling food, drinks, and desserts		
Describe all **owned** fixtures, furniture, and equipment to be used on site tables, chairs, refrigerator, oven, proofer, Beverage dispenser, stove, microwave, any additional kitchen appliances		
Describe all **leased** fixtures, furniture, and equipment to be used on site —		
Describe any alterations planned for the site **and** estimated cost of renovation —		
Person responsible for obtaining building permit (if required)		
Square footage of site 3,600	# of employees 20	# of parking spaces to be used
Days & hours of operation Sun-Sat 9am - 8pm	Proposed date of occupancy April - 15, 2025	

Attach a site plan to this application (see Directions for Conditional Use Permit). Site plan must include a layout of the inside of the store.

This application must be fully completed to be considered by the Village.

Fee: $300.00 (non-refundable)

Valerie Daniels-Carter	Valerie Daniels-Carter	2/11/25
Business Owner Signature	Printed Name	Date

Updated 01/24/2024

Receipt No: 22000071 Feb 11, 2025

NINO'S SOUTHERN SIDES

Previous Balance: .00
LICENSES & PERMITS
OTHER PERMIT 300.00

Total: 300.00
==========
ONLINE - CREDIT CARD 300.00
Payor:
NINO'S SOUTHERN SIDES
Total Applied: 300.00

Change Tendered: .00
==========
02/11/2025 2:36 PM

VILLAGE OF FOX POINT
7200 N. SANTA MONICA BLVD
FOX POINT WI 53217 414-351-8900

Kevin Ausman

From: Alisha Mir-Marwood <am@midlandmgtllc.com>
Sent: Monday, February 24, 2025 1:38 PM
To: Kevin Ausman
Subject: Nino's at Riverpoint Shopping Center

Thanks for your call Kevin.

Nino's Southern Sides has approval from the owner, North Shore Centers Partners, to apply for a conditional use permit to operate a restaurant located at 8775 North Port Washington Road, Fox Point, WI.

I've also spoken with James who has indicated he would be in touch with you today.

Please let me know should you need any further information.

Thank you!

Alisha E. Mir-Marwood, CPM®
MIDLAND MANAGEMENT LLC
am@midlandmgtllc.com
Office: 414.928.3972
After Hours Emergencies: #262.821.8201

Ninos Café Operational Plan

Business Name: Ninos Café

Concept: A casual dining establishment serving high-quality Southern cuisine in a buffet-style format with indoor and outdoor seating options.

1. Business Overview

Ninos Café will operate as a buffet-style restaurant offering dine-in and carry-out options. The restaurant will focus on providing an inviting and relaxed dining experience with an emphasis on Southern hospitality and fresh, high-quality ingredients.

Key Features:

- Buffet-style service for efficiency and customer convenience.
- Outdoor seating with three wrought iron tables (seating for 4 each) along the north end of the building.
- No liquor service, eliminating the need for alcohol licensing.
- Takeout and carryout options available.
- No tablecloths or additional materials on outdoor tables for ease of maintenance.
- Signage: A logo-based sign for branding and visibility.

2. Operating Hours & Staffing

Operating Hours:

- Saturday – Sunday: 9:00 AM – 8:00 PM
- Outdoor dining available only in spring and summer (when daylight extends past 8:30 PM).

6933 WEST BROWN DEER RD., MILWAUKEE, WISCONSIN 53223 - TELEPHONE 414.365.9003 FAX 414.365.9467

Staffing Plan:

To ensure smooth operations, Ninos Café will maintain a structured staffing model:

Position	Responsibilities	Number of Staff (Per Shift)
General Manager	Oversee operations, customer service, and compliance	1
Head Chef	Manage kitchen operations, food preparation, and quality control	1
Kitchen Staff	Food preparation, buffet setup, and cleanup	3
Buffet Attendants	Replenish food, maintain cleanliness, and assist customers	2
Cashier	Handle payments, assist with takeout orders	1
Servers	Customer assistance, clearing tables, refilling drinks	2
Cleaning Crew	Maintain cleanliness and sanitation	1

Total staff per shift: 11 employees

A flexible staffing model will be implemented to adjust for peak dining hours, ensuring that additional personnel are available during lunch (11:30 AM - 2:00 PM) and dinner rush (5:30 PM - 7:30 PM).

3. Facility Layout & Seating Plan

Indoor Seating:

- Layout will accommodate 15 tables with comfortable spacing for an optimal dining experience.
- Buffet station will be centrally located for easy customer access.

Outdoor Seating:

- Three wrought iron tables, each seating 4 guests along the north end of the building.
- No obstructions to walkways and pedestrian traffic.
- No need for lighting or heating elements, as outdoor dining is seasonal.

4. Service & Customer Experience

Buffet Service Model:

- will serve customers from the buffet stations.
- Staff will regularly replenish food to ensure freshness.
- Buffet attendants will be available to assist customers.
- Used dishes will be cleared efficiently to maintain cleanliness.

Takeout & Carryout Process:

- Customers can order to-go meals from a designated buffet area.
- A separate checkout lane for takeout orders will ensure efficiency.
- Packaging will be eco-friendly and designed for easy transport.

Customer Service & Satisfaction:

- Staff will be trained in Southern hospitality, ensuring a warm and friendly atmosphere.
- Feedback mechanisms (surveys, online reviews) will be encouraged to improve service.
- A loyalty program may be introduced to reward repeat customers.

5. Parking & Traffic Flow

- Ninos Café will be allotted a maximum of 10 parking spaces, which aligns with anticipated customer traffic.
- Staff will be encouraged to use alternative transportation or park in designated employee areas to maximize customer availability.
- Walk-up and takeout customers will have a dedicated pick-up area to reduce congestion.

6. Waste Management & Sustainability

- Trash disposal & recycling: Coordination with Midland Management for refuse and waste management services.
- Eco-friendly packaging for to-go meals.
- Sustainable operations: Energy-efficient appliances and responsible sourcing of ingredients.

7. **Compliance & Licensing**

• Health & Safety: Ninos Café will comply with all food safety and sanitation regulations required by local health departments.

• No liquor license required, as alcoholic beverages will not be served.

• Outdoor seating regulations: Seating layout complies with city zoning and sidewalk regulations.

8. **Financial Plan & Revenue Model**

Projected Revenue Streams:

1. Buffet dining sales – Main source of revenue.

2. Takeout and carryout sales – Secondary revenue source.

3. Seasonal outdoor seating – Additional revenue during spring and summer.

Cost Considerations:

• Initial investment for equipment, furniture, and signage.

• Ongoing costs: Staffing, food supplies, rent, utilities, waste management.

A detailed financial projection will be developed to estimate profitability over the first 12 months.

9. Marketing & Growth Strategy

Initial Marketing Efforts:

• Grand opening event to attract the community.

• Social media campaigns to build brand awareness.

• Local partnerships with businesses and community organizations.

• Word-of-mouth marketing through exceptional service and food quality.

Long-Term Growth:

• Expansion of catering services.

• Introduction of seasonal menu items.

• Customer loyalty programs and promotions.

10. Contingency Planning

Operational Risks & Mitigation:

Risk	Mitigation Strategy
Food wastage in buffet	Implement portion control and monitor food consumption trends
Seasonal weather affecting outdoor seating	Focus marketing on indoor dining during colder months
Staffing shortages	Cross-training employees and maintaining a flexible hiring pipeline
Supply chain disruptions	Establish relationships with multiple vendors to ensure steady inventory

Conclusion

Ninos Café is positioned to be a successful Southern-style buffet restaurant by offering high-quality food, a welcoming atmosphere, and a streamlined service model. By carefully managing operations, compliance, and marketing efforts, Ninos Café aims to build a strong reputation and become a favorite dining destination in the community.

For future questions or concerns please don't hesitate to contact me

Chef James Garner

262-875-0508

TI TEMPLATE V1.0.

NINO'S SOUTHERN SIDES

8775 N. PORT WASHINGTON RD.
FOX POINT, WI 53217

PROJECT GENERAL NOTES:

1. GENERAL CONTRACTOR (G.C.) SHALL FIELD VERIFY ALL DIMENSIONS AND STRUCTURAL LOCATIONS AT THE JOBSITE, AND BE RESPONSIBLE FOR THE PROPER FITTING OF WORK THERETO. REPORT ANY DISCREPANCIES TO THE ARCHITECT AND TO THE TENANT PRIOR TO THE COMMENCEMENT OF CONSTRUCTION.
2. WORK SHALL CONFORM TO APPLICABLE LOCAL CODES AND TO LANDLORD'S REQUIREMENTS, INCLUDING TENANT'S EXECUTED LEASE AND CONSTRUCTION EXHIBITS.
3. G.C. SHALL ERECT AND REMOVE TEMPORARY STOREFRONT BARRICADE AS REQUIRED. REMOVAL OF BARRICADE IS TO OCCUR ONLY AFTER APPROVAL IS RECEIVED FROM LANDLORD. VERIFY ALL REQUIREMENTS WITH LANDLORD PRIOR TO CONSTRUCTION. PRIOR TO COMMENCEMENT OF ANY DEMOLITION, LOCATE, PROTECT AND PRESERVE ALL LANDLORD'S EXISTING ELECTRICAL AND MECHANICAL SYSTEMS WITHIN THE SPACE.
4. SECURE AND PAY FOR ALL PERMITS, TEMPORARY UTILITIES, AND CARRY LIABILITY INSURANCE AS REQUIRED BY THE FRANCHISEE & L.L.
5. THE CONTRACT FOR CONSTRUCTION SHALL BE BETWEEN THE G.C. AND THE TENANT. IN ITS ADVISORY CAPACITY, FRANCHISEE, ASSUME NO LIABILITY UNDER THE AGREEMENT, OR ON BEHALF OF ANY OTHER SUBCONTRACTOR.
6. PRIOR TO THE START OF CONSTRUCTION, G.C. SHALL PROVIDE PERFORMANCE, LABOR AND MATERIAL PAYMENT BOND AND GENERAL LIABILITY INSURANCE AS REQUIRED. GC SHALL PROVIDE A COPY OF WORKERS COMPENSATION INSURANCE CERTIFICATE TO FRANCHISEE IN ADDITION TO PERFORMANCE BOND AND GENERAL LIABILITY INSURANCE PRIOR TO COMMENCEMENT OF WORK.
7. DO NOT SCALE THE DRAWINGS. ANY DIMENSIONAL DISCREPANCIES SHALL BE BROUGHT TO THE ATTENTION OF THE ARCHITECT FOR CLARIFICATION PRIOR TO COMMENCING CONSTRUCTION.
8. ANY FLOOR PENETRATIONS MUST BE CORE BORED, SLEEVED,GROUTED AND MADE WATERPROOF. COORDINATE ALL FLOOR PENETRATIONS WITH LANDLORD. G.C. SHALL BE RESPONSIBLE FOR FULL DIRECT AND INDIRECT COSTS TO REPAIR ANY DAMAGE DUE TO,OR ARISING OUT OF TENANT'S CONSTRUCTION WORK.
9. ALL FLOOR FINISHES, E.G., RESILIENT TILE, or TILE PAVERS SHALL BE LEVEL AND FLUSH AT INTERSECTIONS. PROVIDE TAPERED THRESHOLD AT ANY TRANSITIONS. DO NOT USE THRESHOLDS OR TRANSITION DEVICES AT INTERSECTION OF STORE FLOORING.
10. NON-COMBUSTIBLE MATERIALS ONLY ARE PERMITTED ABOVE CEILINGS.
11. G.C. SHALL COORDINATE INSTALLATION OF SIGNS WITH CONSTRUCTION OF SOFFIT FRAMING TO ENSURE ACCESS TO BULKHEAD FOR SIGN OR TRANSFORMER INSTALLATIONS.
12. IF ANY ROOF PENETRATIONS ARE REQUIRED, G.C. SHALL EMPLOY AND PAY FOR LANDLORD'S ROOFING CONTRACTOR TO PERFORM THE CUTTING AND REINFORCING, AND FLASHING OF ROOF OPENINGS, IF ANY.
13. IF ANY FIRE SPRINKLER, FIRE ALARM AND/OR FIRE RETARDANT WORK IS TO BE DONE, G.C. SHALL EMPLOY AND PAY FOR LANDLORD'S APPROVED CONTRACTOR TO PERFORM THE WORK.
14. THE SUBSTRATE FOR TOPS ON CABINETWORK SHALL BE A MARINE GRADE MEDIUM DENSITY FIBERBOARD. MEDEX OR EQUIVALENT.
15. G.C. SHALL PROVIDE TO TENANT AND TO LANDLORD A MINIMUM ONE-YEAR WARRANTY, NAMING BOTH FRANCHISEE AND LANDLORD,AGAINST DEFECTS IN WORKMANSHIP, MATERIALS AND EQUIPMENT.
16. PRIOR TO THE ANTICIPATED SHIPPING DATE, G.C. SHALL VERIFY WITH THE TENANT THE NAME AND PHONE NUMBER OF THE TRUCKING COMPANY WHICH WILL DELIVER EQUIPMENT FROM THE EQUIPMENT SUPPLIER INTO THE SPACE.
17. G.C. SHALL PROVIDE TO THE FRANCHISEE AS-BUILT DRAWINGS FOR THE HVAC AND THE PLUMBING SYSTEMS INCLUDING ANY AND ALL MODIFICATIONS TO THE DRAWINGS.
18. G.C. SHALL CERTIFY THAT NO ASBESTOS CONTAINING MATERIALS(ACM'S) WERE USED IN THE CONSTRUCTION OF THE PREMISES.
19. G.C. SHALL OBTAIN ALL REQUIRED INSPECTIONS, AND SECURE ALL OFFICIAL APPROVALS OF WORK PERFORMED. THE CONTRACTOR SHALL SUBMIT ALL CERTIFICATES OF INSPECTION AND CERTIFICATE OF OCCUPANCY TO THE TENANT UPON COMPLETION OF THE WORK.
20. G.C. SHALL OBTAIN LIEN WAIVERS FROM ALL SUBCONTRACTORS OR SUPPLIERS WHO HAVE A CONTRACT WITH G.C. OR PROVIDE SERVICES OR SUPPLIES, AND SHALL DELIVER LIEN WAIVERS AND G.C.'S LIEN WAIVER TO TENANT WITH EACH PAY REQUEST.
21. PROPERLY SEAL ALL FLOORS, WALLS AND CEILINGS AROUND DUCTS,PIPES AND CABLES TO PREVENT VERMIN HARBORAGE. SEAL ALL GAPS, CRACKS, JOINTS AND OPENINGS GREATER THAN 1/4" WIDE WITH PAINTABLE CAULK. USE BACKER ROD BEHIND CAULK WHERE JOINTS EXCEED 1/4". PAINT TO MATCH ADJOINING SURFACES. SEAL ALL FLOOR-MOUNTED EQUIPMENT TO FLOOR UNLESS EQUIPMENT IS MOUNTED ON LEGS AT LEAST 6" HIGH.
22. ALL PAINTED WOOD SHALL BE PAINT GRADE BIRCH OR COMPARABLE.
23. G.C. SHALL BE RESPONSIBLE FOR ALL FINISH WORK UNLESS OTHERWISE INDICATED IN THE DRAWINGS. ALL PAINTING REQUIRED SHALL BE THREE-COAT SEMI-GLOSS ENAMEL UNLESS OTHERWISE INDICATED IN THE DRAWINGS. FOLLOWING THE INSTALLATION OF CONTRACTOR SUPPLIED CABINETS, THE CONTRACTOR SHALL PROVIDE FACINGS AND COVERINGS INDICATED.
24. AT THE COMPLETION OF THE WORK, G.C. SHALL FURNISH TO THE ARCHITECT, ONE SET OF DRAWINGS MARKED IN RED WHERE CHANGES WERE MADE TO THE DRAWINGS, WHERE SUGGESTIONS OR COMMENTS MIGHT HAVE IMPROVED OR CLARIFIED THE DOCUMENTS,OR WHERE FUTURE DETAILS ON FUTURE SETS OF DOCUMENTS COULD BE IMPROVED. THESE ARE FOR THE ARCHITECT'S ON-GOING DOCUMENT QUALITY ENHANCEMENT PROGRAM.
25. PROVIDE MINIMUM OF ONE, MAXIMUM OF TWO (2A RATING) FIRE EXTINGUISHER(S), TO COMPLY WITH REQUIREMENTS OF THE NFPA,THE LOCAL FIRE DEPARTMENT AND THE LANDLORD'S INSURANCE COMPANY.
26. ONE SET OF LATEST LANDLORD APPROVED DRAWINGS, CITY APPROVED PERMIT DOCUMENTS AND LANDLORD'S CONSTRUCTION GUIDELINES TO BE KEPT ON SITE AND AVAILABLE FOR VERIFICATION AT ALL TIMES.

BUILDING CODE SUMMARY:

BUILDING CODE AGENCY/JURISDICTION	VILLAGE OF FOX POINT - MILWAUKEE COUNTY
BUILDING CODE	2015 WISCONSIN BUILDING CODE 2015 WISCONSIN EXISTING BUILDING CODE 2015 WISCONSIN FUEL GAS CODE 2015 WISCONSIN MECHANICAL CODE 2018 WISCONSIN UNIFORM PLUMBING CODE 2017 WISCONSIN ELECTRICAL CODE 2015 WISCONSIN FIRE CODE 2009 WISCONSIN ACCESSIBILITY CODE
OCCUPANCY CLASSIFICATION	ASSEMBLY
TYPE OF CONSTRUCTION	TYPE II-B
TOTAL NUMBER OF STORIES	1 LEVEL TOTAL
FIRE SUPPRESSION SYSTEM	FULLY SPRINKLERED
OCCUPANT LOAD	
OCCUPANT LOAD SQ. FT.	SEE OCCUPANT SCHEDULE ON THIS SHEET
TOTAL PROJECT SQ. FT.	3427 SF
TOTAL EXITS REQUIRED	2
EXITS PROVIDED	2
REQUIRED MINIMUM DISTANCE BETWEEN DOORS PER CODE	29' - 4 5/8"
ACTUAL DISTANCE BETWEEN EXIT DOORS	49' - 1/2"
MAXIMUM TRAVEL DISTANCE	75' MAX COMMON PATH / 250' MAX. W/ AUTOMATIC SPRINKLER SYSTEM
WIDTH OF EXIT PASSAGEWAY	WIDTH NOT LESS THAN 36" (< 50 OCCUPANTS)

NOTE: AREA SQUARE FOOTAGES SHOWN ARE FOR THE BUILDING CODE REVIEWERS USE AND REVIEW ONLY. AREA CALCULATIONS SHOWN ARE NOT RELATED TO TENANT LEASING INFORMATION.

SHEET INDEX:

Sheet	Sheet Name	Current Revision Date
A0.0	PROJECT INFORMATION	
A0.1	SPECIFICATIONS	
A1.0	DEMOLITION FLOOR PLAN	
A1.1	DEMOLITION REFLECTIVE CEILING PLAN	
A1.2	FLOOR & FINISH PLAN	
A1.3	MILLWORK & COUNTERTOP PLAN	
A1.4	FIXTURE AND EQUIPMENT PLAN	
A2.0	PARTITION TYPES & DOOR TYPES	
A2.1	MILLWORK DETAILS	
A3.0	REFLECTED CEILING PLAN	
A5.0	ELEVATIONS	
E001	ELECTRICAL LIGHTING PLAN	
E101	LIGHTING PLAN	
E201	POWER PLAN	
E301	PANEL SCHEDULE	
H1.0	HOOD DETAILS	
M1.0	MECHANICAL SPECIFICATIONS	
M2.0	MECHANICAL FLOOR PLAN	
M2.1	MECHANICAL ROOF PLAN	
M3.0	MECHANICAL SCHEDULES	
M4.0	MECHANICAL SCHEDULES	
P1.0	PLUMBING PLAN	
P2.1	PLUMBING SPECIFICATIONS	
P3.1	PLUMBING WASTE PLAN	
P4.1	PLUMBING SUPPLY PLAN	
P5.1	PLUMBING DETAILS	

OCCUPANT & TRAVEL DISTANCE SCHEDULES:

OCCUPANCY SCHEDULE

NAME	AREA	LOAD FACTOR	OCCUPANT LOAD
ASSEMBLY	1729 SF	15	116
KITCHEN	1279 SF	200	7
STORAGE	68 SF	300	1
UNOCCUPIED	351 SF	0	0
TOTAL: 3427 SF		PERSONS: 124	

TRAVEL DISTANCES

Path ID	Actual Travel Distance
A	86' - 9"
B	90' - 7"

AREA LEGEND

- ASSEMBLY
- KITCHEN
- STORAGE
- UNOCCUPIED

NOTE: AREA SQUARE FOOTAGE SHOWN ARE FOR THE BUILDING CODE REVIEWERS USE AND REVIEW ONLY. AREA CALCULATIONS SHOWN NOT RELATED TO TENANT LEASING INFORMATION.

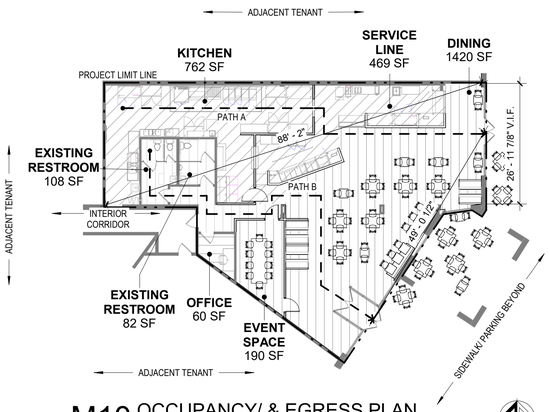

M10 OCCUPANCY/ & EGRESS PLAN
1/16" = 1'-0"

PLUMBING FIXTURE REQUIREMENTS

NAME	WATERCLOSETS		LAVATORIES		DRINKING FOUNTAINS	
	MALE	FEMALE	MALE	FEMALE	REG.	ACC.
RESTROOM	1	1	1	1	*0	*0

*PER SECTION 410 OF THE INTERNATIONAL PLUMBING CODE: WHERE WATER IS SERVED IN RESTAURANTS, DRINKING FOUNTAINS SHALL NOT BE REQUIRED

PROJECT LOCATION:

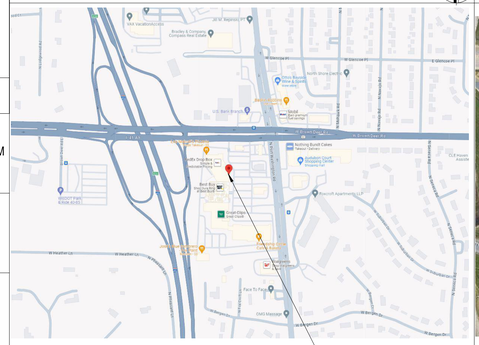

KEY PLAN:

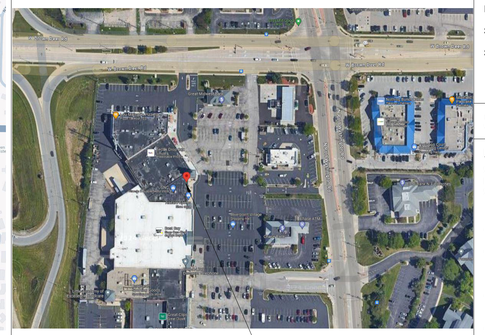

PROJECT SCOPE SUMMARY:

INTERIOR TENANT FIT-OUT OF A SPACE SELLING BAKED GOODS AND BEVERAGES.

SCOPE TO INCLUDE ARCHITECTURAL, MECHANICAL, ELECTRICAL AND PLUMBING DESIGN.

SPACE WAS A FORMER COSI RESTAURANT

SEPARATE SUBMITTALS:

ITEMS NOT INCLUDED UNDER THE PERMITTING OF THESE DRAWINGS

SPRINKLER
FIRE ALARM
SIGNAGE

- GC RESPONSIBLE FOR OBTAINING ALL NECESSARY FIRE ALARM AND SPRINKLER DRAWINGS AND SUBMITTING FOR REQUIRED PERMITS
- LANDLORD CRITERIA: SIGNAGE MANUFACTURER IS RESPONSIBLE FOR OBTAINING SIGNAGE CRITERIA FROM GENERAL CONTRACTOR OR LANDLORD, AND FOR COMPLIANCE WITH ALL REQUIREMENTS REGARDING FABRICATION, FASTENER DETAILING, INSTALLATION, ETC... OF FINISHED SIGN. FINAL INSTALLATION MUST BE APPROVED BY LANDLORD.
- SHOP DRAWINGS: SIGNAGE MANUFACTURER TO PROVIDE SHOP DRAWINGS FOR LANDLORD APPROVAL. ALL SIGNAGE INCLUDING MAIN STOREFRONT SIGN AND GLASS APPLIED VINYL LETTERING. SHOP DRAWING SUBMITTAL TO CONFIRM ALL DIMENSIONS, POSITIONING, FASTENINGS, FINISHES, COLORS, ETC...
- SIGNAGE CONTRACTOR IS RESPONSIBLE FOR SUBMITTING ALL DRAWINGS AND DETAILS FOR REQUIRED PERMITS.

PROJECT DIRECTORY:

FRANCHISEE PARTNER:
V&J FOODS, LLC
6933 W BROWN DEER RD,
MILWAUKEE, WI 53223
TIM FOSTER
TFOSTER@VJFOOD.COM
(810) 560-6034

DESIGN CONSULTANT/ARCHITECT CONTACT:
OCULUS INC.
ONE SOUTH MEMORIAL DRIVE
SUITE 1500
ST. LOUIS, MO 63102
CHELSEA PENISTON
CHELSEAP@OCULUSINC.COM
(314) 367-6100

BUILDING DEPARTMENT:
VILLAGE OF FOX POINT
7200 N SANTA MONICA BLVD
FOX POINT, WI 53217
(414) 247-6622

ENGINEER CONTACT:
CASE ENGINEERING
796 MERUS COURT
FENTON, MO 63026
PHONE: 636-349-1600
FAX: 636-349-1730

HEALTH DEPARTMENT:
MILWAUKEE COUNTY HEALTH AND HUMAN SERVICES
1220 W VLIET ST #302, MILWAUKEE, WI 53205
(888) 947-6583

Oculus Inc.
1 S. Memorial Dr., Suite 1500
St. Louis, MO 63102
314.367.6100
www.oculusinc.com

NINO'S Southern Sides

FOX POINT

8775 N. PORT WASHINGTON RD.
FOX POINT, WI 53217

#	Description	Date

These drawings/specifications are the property of Oculus Inc. They are furnished as contract documents only. The seal(s) and signature(s) apply only to the document to which they are affixed, and expressly disclaim any responsibility for all other plans, specifications, estimates, reports or other documents or instruments relating to or intended to be used for any part or parts of the architectural or engineering project. Additionally these drawings and seal(s) shall in no way convey or imply any type of warranty or certification relating to the performance of products and materials beyond those provided by their respective manufacturer.
© 2024 Oculus Inc.

ISSUED FOR PERMIT

Client Approval

PROJECT INFORMATION

Project #	68423-WI01
Issue Date	12/5/2024
Scale	AS INDICATED
Drawn by	BJK
Checked by	CAP

A0.0

12/10/2024 1:56:48 PM FOX POINT

TI TEMPLATE V1.0

GENERAL NOTES

1.0 REGULATORY REQUIREMENTS:

1.1 WORK TO BE PERFORMED UNDER THIS CONTRACT IS DEFINED BY THE DOCUMENTS INDEXED (SIDE TITLE BLOCK) - NOTE THAT FIRE PROTECTION CONTRACTS ARE TO BE AWARDED ON A DESIGN / BUILD BASIS AND MECHANICAL, ELECTRICAL AND FIRE PROTECTION ENGINEERS AND CONTRACTORS SHALL BE RESPONSIBLE FOR THE PREPARATION OF THEIR OWN CONTRACT / CONSTRUCTION DOCUMENTS SHALL BE PREPARED UNDER THE DIRECTION OF LICENSED PROFESSIONALS, THE EXTENT REQUIRED BY THE APPLICABLE LAWS, BY-LAWS, CODES AND REGULATIONS APPLICABLE TO THE CITY OR STATE.

1.2 BUILDING CLASSIFICATION ON ALL CONSTRUCTION SHALL BE GOVERNED BY THE LATEST EDITION OF THE APPLICABLE STATE BUILDING CODE WITH ALL OR INCLUSIVE OF ANY REVISIONS OR ADDENDUM. ALL WORK TO BE CONSTRUCTED AND INSTALLED PER THE APPLICABLE REQUIREMENTS OF THE CITY AND ALL AUTHORITIES HAVING JURISDICTION.

1.3 GENERAL CONTRACTOR SHALL BE RESPONSIBLE FOR ENSURING THAT ALL WORK IS IN COMPLIANCE WITH ALL LIFE SAFETY AND ACCESSIBILITY REQUIREMENTS FOR THE DISABLED IN ACCORDANCE WITH ALL APPLICABLE LAWS, CODES AND REGULATIONS.

1.4 ALL LABOR MATERIALS, FINISHED EQUIPMENT AND THE FINAL FINISHED PROJECT, AS INDICATED BY THE CONTRACT DOCUMENTS, SHALL BE PROVIDED BY THE CONTRACTORS PER GOVERNING CITY AND LOCAL CODES AND ANY OTHER APPLICABLE REGULATIONS AND CODES. THE WORK SHALL INCLUDE ALL SITE DEVELOPMENT, DETECTION SYSTEM, FIRE PROTECTION SYSTEM AND ANY AND ALL WORK AS REQUIRED BY THE AGENCIES HAVING JURISDICTION.

1.5 ALL WORKS & ARCHITECTURAL DRAWINGS TO BE APPROVED BY LANDLORD PRIOR TO START OF INSTALLATION (IF REQUIRED).

1.6 RESERVED (NOT USED)

1.7 PRIOR TO THE START OF CONSTRUCTION, THE GENERAL CONTRACTOR SHALL MEET WITH APPROPRIATE REPRESENTATIVES OF LANDLORD AUTHORITY AND OTHERS OF THE DIRECTION. CONTRACTOR SHALL COMPLY WITH ALL REQUIREMENTS FOR BARRICADES, SAFETY, WORK HOURS, ETC.

1.8 THE GENERAL CONTRACTOR TO COORDINATE ALL NEW WORK IN ACCORDANCE WITH REQUIREMENTS OF LANDLORD. REFER TO LANDLORD'S TECHNICAL HANDBOOK. THE GENERAL CONTRACTOR IS RESPONSIBLE FOR OBTAINING PERTINENT LANDLORD'S HANDBOOKS AND/OR OTHER CONSTRUCTION CRITERIA.

1.9 GENERAL CONTRACTOR SHALL BEAR FULL RESPONSIBILITY AND COST FOR THE FOLLOWING:

1.9.1 ALL PERMITS, TO COORDINATE RECEPTION OF BUILDING PERMIT WITH LANDLORD.

1.9.2 ALL TEMPORARY POWER AND UTILITIES INCLUDING HOOK-UP AND ALL RELATED FEES AND CHARGES.

1.9.3 ALL TRASH REMOVAL OR CHARGES FOR SAME BY LANDLORD (TRASH REMOVED BY THE CONTRACTOR) SHALL BE DISPOSED OF ON A MANNER COMPLIANT WITH ALL APPLICABLE LAWS AND REGULATIONS.

1.10 EACH SUBCONTRACTOR SHALL COORDINATE THEIR WORK WITH THAT OF OTHERS AND BE AWARE OF ALL RELATED WORK TO BE PERFORMED BY OTHERS, VIA THE TENANT'S CONTRACTOR.

1.11 CONTRACTOR AND EACH SUBCONTRACTOR SHALL BE THOROUGHLY FAMILIAR WITH THE WORK SHOWN ON THE DRAWINGS AND ON OTHER CONTRACT DOCUMENTS.

2.0 DRAWING LIMITATIONS:

2.1 DO NOT SCALE DRAWINGS. ALL EXISTING AND PROPOSED DIMENSIONS SHALL BE VERIFIED IN FIELD PRIOR TO CONSTRUCTION AND PRIOR TO THE FABRICATION AND INSTALLATION OF ANY BUILT-IN FIXTURES OR EQUIPMENT. THE GENERAL CONTRACTOR TO NOTIFY ARCHITECT OF ANY DISCREPANCIES PRIOR TO PROCEEDING WITH THE PROPOSED WORK.

2.2 THE DRAWINGS ARE PREPARED FOR PURPOSES OF CONSTRUCTION ONLY AT THE SPECIFIC SITE INDICATED. THESE DRAWINGS ARE NOT TO BE USED FOR MAINTENANCE PURPOSES AS ACTUAL CONDITIONS MAY VARY FROM THOSE INDICATED DUE TO CHANGE ORDERS, ALTERATIONS BY OTHERS, FIELD CONDITIONS, ETC...

2.3 THE CONTRACT DOCUMENTS INDICATE WORK FOR THE SPECIFIC PROJECT LOCATION NOTED. THESE DOCUMENTS REMAIN THE PROPERTY OF THE TENANT AND MAY NOT BE USED FOR ANY OTHER PROJECT OR PURPOSE WITHOUT EXECUTION OF A WRITTEN AGREEMENT WITH ARCHITECT AND PAYMENT OF RELATED COMPENSATION.

3.0 EXISTING CONDITIONS:

3.1 PRIOR TO SUBMITTING BID PROPOSALS, THE GENERAL CONTRACTOR AND EACH SUBCONTRACTOR SHALL VISIT THE PROPOSED SPACE AND FAMILIARIZE THEMSELVES WITH ALL EXISTING CONDITIONS, TAKE FIELD MEASUREMENTS AND RECORD ALL INFORMATION NEEDED TO PROVIDE A COMPLETE SCOPE OF WORK.

3.2 THE GENERAL CONTRACTOR SHALL THOROUGHLY REVIEW ALL EXISTING CONDITIONS PRIOR TO CONSTRUCTION. CONTRACTOR SHALL NOTIFY BOTH ARCHITECT AND THE TENANT WHEN ANY EXISTING CONDITION CONFLICTS WITH OR IS NOT COVERED BY PROJECT DOCUMENTS. NOTIFICATION TO BE IN WRITING WITHIN 24 HOURS. CONTRACTOR TO CLARIFY WITH ARCHITECT ANY DISCREPANCIES IN DOCUMENTATION PRIOR TO CONSTRUCTION, PURCHASE OF MATERIALS OR INSTALLATION.

3.3 CONTRACTOR SHALL VERIFY ALL DIMENSIONS AND FIELD LOCATIONS NOT DIMENSIONED IN THESE DOCUMENTS.

3.4 ALL DIMENSIONS INDICATED ARE TO THE FINISHED FACE OF ITEM UNLESS NOTED OR CLEARLY INDICATED OTHERWISE.

3.5 EXISTING CONDITIONS TAKE PRECEDENCE OVER DRAWINGS AND SPECIFICATIONS FOR DIMENSIONS.

3.6 GENERAL CONTRACTOR TO VERIFY ALL EXISTING CONDITIONS, DIMENSIONS AND LAYOUT OF WORK. G.C. TO NOTIFY TENANT'S CONSTRUCTION MANAGER AND ARCHITECTS OF ANY DISCREPANCIES IMMEDIATELY. G.C. IS RESPONSIBLE FOR ANY ERROR RESULTING FROM FAILURE TO EXERCISE SUCH PRECAUTION. SUCH ERROR WILL NOT BE CONSIDERED SUBSEQUENTLY AS A BASIS FOR EXTRA COMPENSATION.

4.0 MODIFICATIONS AND SUBSTITUTES:

4.1 NO EXTRA COMPENSATION WILL BE ALLOWED BECAUSE OF A MISUNDERSTANDING AS TO THE AMOUNT OF WORK INVOLVED OR A LACK OF KNOWLEDGE WITH THE EXISTING CONDITIONS.

4.2 DO NOT SUBSTITUTE MATERIALS, EQUIPMENT OR METHODS UNLESS SUCH SUBSTITUTION HAS BEEN APPROVED SPECIFICALLY IN WRITING BY ARCHITECT AND THE TENANT.

4.3 ALTERNATIVE PROPOSALS WILL BE ACCEPTED OR REJECTED BEFORE ISSUANCE OF CONTRACTS. NO CHANGES PERMITTED AFTER CONTRACT IS SIGNED.

4.4 COST OF ANY CHANGES REQUIRED BY OTHER TRADES DUE TO SUBSTITUTION OF ALTERNATE MATERIALS SHALL BE INCLUDED IN THE ALTERNATE PROPOSAL.

5.0 MODIFICATIONS AND SUBSTITUTES:

5.1 SELECTIVELY DEMOLISH AND COMPLETELY REMOVE FROM SITE ITEMS SCHEDULED ON THE DRAWINGS, SPECIFIED HEREIN, DEBRIS AND ITEMS IDENTIFIED BY THE TENANT. ITEMS IDENTIFIED BY TENANT TO BE RETURNED TO TENANT. ALL OTHER ITEMS TO BECOME THE PROPERTY OF THE GENERAL CONTRACTOR.

5.2 ALL EXISTING ACCESSORIES, HANGING SYSTEMS AND HARDWARE ALONG WITH ALL LIGHTING, ELECTRICAL AND MECHANICAL EQUIPMENT, SUSPENDED CEILING SYSTEMS AND ALL OTHER ITEMS ARE THE PROPERTY OF THE TENANT. REMOVAL OF ELEMENTS NOT USED MUST BE COORDINATED BETWEEN G.C. AND TENANT.

5.3 PROVIDE DUST CONTROL ENCLOSURES AND PROTECTION FOR OCCUPANTS (IF REQUIRED).

5.4 THE CONTRACTOR SHALL MAINTAIN THE WORK SITE IN AN ORDERLY MANNER FREE OF ACCUMULATED DEBRIS, WITH MATERIALS STORED IN ORDER TO MINIMIZE INTERFERENCE WITH WORK BEING PERFORMED. AT THE CONCLUSION OF THE WORK THE PROJECT SHALL BE CLEANED TO THE TENANT'S SATISFACTION.

5.5 THE GENERAL CONTRACTOR, BEFORE DEMOLITION, SHALL INSPECT AND VERIFY CONDITIONS OF ALL MECHANICAL (VENTILATION, PLUMBING, DRAINAGE, ETC...) AND ELECTRICAL (HEATING, DISTRIBUTION, PANELS ALARM AND SECURITY SYSTEMS, ETC...) SYSTEMS SO AS NOT TO DAMAGE FUNCTIONING EXISTING SYSTEMS.

5.6 ALL DEMOLITION WORK, STOREFRONT GLAZING, ETC. WHICH CAN AFFECT THE STRUCTURAL STABILITY OF THE EXISTING STRUCTURE IS THE RESPONSIBILITY OF THE GENERAL CONTRACTOR. SPECIAL ATTENTION SHOULD BE GIVEN TO THE AREA OF THE STOREFRONT WINDOWS FOR LATERAL LOADS & MOVEMENTS.

WORK NOTES

1.0 SITE PREPARATION AND COORDINATION:

1.1 THE GENERAL CONTRACTOR SHALL VERIFY WITH LANDLORD AUTHORITIES THE EXACT LEASE LINE / FRONT CONSTRUCTION LINE OF THE TENANT SPACE AND SHALL BE FAMILIAR WITH AND COMPLY WITH ALL REQUIREMENTS FOR THE IN INTERSECTION OF THE TENANT CONSTRUCTION WITH THE LANDLORD CONSTRUCTION. THE LEASE LINE / FRONT CONSTRUCTION LINE IS TYPICALLY THE BACK OF THE SITE CONSTRUCTION WHICH CONSISTS OF THE FOLLOWING: EXISTING CONCOURSE FLOOR COVERING (MALL / BUILDING TILE), EXISTING GYPSUM BOARD COLUMN ENCLOSURES AND EXISTING GYPSUM BOARD BULKHEAD ABOVE. THE GENERAL CONTRACTOR SHALL NOTIFY BOTH ARCHITECT AND THE TENANT OF ANY REQUIREMENTS THAT CAUSES A CONFLICT WITH THE PROPOSED WORK INDICATED BY THE CONTRACT DOCUMENTS.

1.2 THE GENERAL CONTRACTOR SHALL PATCH, REPLACE AND/OR REPAIR ALL EXISTING ELEMENT TO REMAIN DAMAGED OR DISTURBED DURING THE PERFORMANCE OF THE WORK INDICATED BY THE CONTRACT DOCUMENTS. SPECIAL CARE SHALL BE TAKEN TO MAINTAIN OR RESTORE THE INTEGRITY OR ANY FIRE RATED SYSTEM OR ASSEMBLY. THIS SHALL INCLUDE, BUT NOT BE LIMITED TO FIREPROOFING FIRE RATED SEPARATION WALLS AND PARTITIONS AND SMOKE DETECTION AND ALARM SYSTEMS.

1.3 G.C. TO VERIFY EXISTING CONCRETE SLAB FOR APPARENT CRACKS OR OTHER CONDITIONS THAT MAY CAUSE POTENTIAL DAMAGE TO NEW FLOOR INSTALLATION AND NOTIFY ARCHITECT.

1.4 ALL EXISTING SUBSTRATES SHALL BE PATCHED, GROUND FILLED, ETC..., AS REQUIRED TO PROVIDE A SUITABLE SUBSTRATE FOR THE INSTALLATION OR APPLICATION OF A NEW FINISH OVER A SUBSTRATE SHALL CONSTITUTE ACCEPTANCE OF THE SUBSTRATE. THE GENERAL CONTRACTOR SHALL NOTIFY ARCHITECT AND THE TENANT OF ANY SUBSTRATE THAT CANNOT BE REASONABLY PREPARED TO RECEIVE OR ACCEPT THE FINISH INDICATED.

1.5 ALL ATTACHMENT TO THE BASE BUILDING STRUCTURAL SYSTEM OTHER THAN NORMAL CEILING SUSPENSION AND LIGHT FRAMING MUST BE SPECIFICALLY APPROVED IN WRITING BY THE LANDLORD. NO DUCTWORK, PIPING, CONDUIT, ETC... SHALL BE SUSPENDED OR ATTACHED TO THE ROOF DECK. ALL SUCH ITEMS MUST BE SUSPENDED ONLY FROM BEAMS.

1.6 ALL CONTRACTORS SHALL BE FAMILIAR WITH AND COMPLY WITH LANDLORD REQUIREMENTS FOR ATTACHMENT TO AND SUSPENSION FROM THE EXISTING SITE STRUCTURE.

1.7 G.C. TO COORDINATE WITH THE TENANT ALL WORK TO BE PERFORMED AFTER HOURS, TO INSURE THAT STORE REMAIN OPEN DURING NORMAL OPERATING HOURS (IF REQUIRED).

1.8 ONE SET OF THE LATEST LANDLORD APPROVED DRAWINGS, CITY APPROVED PERMIT DOCUMENTS AND LANDLORD'S CONSTRUCTION GUIDELINES TO BE KEPT ON SITE AND AVAILABLE FOR VERIFICATION AT ALL TIMES.

1.9 GENERAL CONTRACTOR SHALL FURNISH TO TENANT, AT COMPLETION OF WORK, ONE (1) COPY OF AS BUILTS, WARRANTIES FOR ALL EQUIPMENT FURNISHED AND A LIST OF ALL SUBCONTRACTORS.

1.10 RESERVED (NOT USED)

1.11 THE CONTRACTOR SHALL BE RESPONSIBLE FOR ALL QUANTITIES AND DIMENSIONS INCLUDING VERIFICATION OF, AND COORDINATION WITH FIELD CONDITIONS. THE CONTRACTOR SHALL BE RESPONSIBLE FOR ALL FABRICATION PROCESSES AND THE MEANS, METHODS TECHNIQUES, SEQUENCES AND PROCEDURES OF CONSTRUCTION AND FOR COORDINATION OF THE WORK OF ALL RELATED TRADES.

1.12 THE GENERAL CONTRACTOR SHALL COORDINATE WITH THE MILLWORK CONTRACTOR ON THE LAYOUT AND DIMENSIONS OF THE PERIMETER WALLS WHICH ARE TO BE THE BACK-UP FOR THE INSTALLATION OF THE LAMINATE WALL PANELS, STANDARDS, SHELVING AND OTHER PERIMETER WALL FIXTURES, AND ALSO ALLOWABLE TOLERANCES IN CONNECTION WITH SOFFIT OR CEILING HEIGHT REQUIREMENTS.

PERIMETER WALL DIMENSIONS: WHERE PERIMETER WALL FIXTURE IS TO BE INSTALLED, ALLOW ADDITIONAL SPACE REQUIRED FOR THE INSTALLATION OF WALL STANDARDS AT THE END OF THESE RUNS. THE GENERAL CONTRACTOR SHALL NOTIFY BOTH ARCHITECT AND THE TENANT OF ANY FIELD CONDITIONS THAT CONFLICT WITH THE STANDARD MODULAR SPACING UNLESS SUCH MODIFICATION IS SPECIFICALLY DIRECTED BY THE TENANT.

1.13 WORKMANSHIP SHALL BE OF THE HIGHEST QUALITY IN EVERY RESPECT, AS USUALLY RECOGNIZED IN THE BUILDING INDUSTRY. ALL SURFACES, MEMBERS, FRAMES AND UNITS SHALL BE TRUE, TIGHT AND NEAT. IF INFERIOR WORKMANSHIP IS EMPLOYED, THE WORK SHALL BE DONE OVER TO CONFORM TO THE HIGHEST QUALITY STANDARDS OF THE TRADES CONCERNED. ALL WORK SHALL BE PERFORMED BY A CONTRACTOR QUALIFIED TO COMPLETE THE WORK TO THE HIGHEST QUALITY IN A SAFE MANNER.

1.14 ALL SUBCONTRACTORS SHALL BE RESPONSIBLE FOR VERIFYING THE LEAD TIME OF THEIR FURNISHED ITEMS' WORK AS PER SPECIFIED PROJECT SCHEDULE.

2.0 MATERIAL REQUIREMENTS:

2.1 ALL NEW WALLS, CEILING AND FLOOR FINISHES SHALL MEET FIRE RATING AND SHALL COMPLY WITH PROVISIONS OF ALL APPLICABLE CODES.

2.2 ALL GYPSUM DRYWALL SHALL BE 5/8" TYPE "X" MATERIAL UNLESS NOTED OTHERWISE. ALL JOINTS SHALL BE TAPED, FINISHED AND SANDED. METAL TRIMS SHALL BE USED AT ALL OUTSIDE CORNERS AND ALL EDGES NOT CONCEALED BY OTHER CONSTRUCTION UNLESS OTHER TREATMENT IS SPECIFICALLY INDICATED.

2.3 ALL CEILING MATERIALS MUST HAVE CLASS "A" FIRE RATING.

2.4 ALL WOOD BLOCKING, SHEATHING OR FRAMING SHALL BE FIRE RETARDANT TREATED LUMBER WITH VISIBLE GRADE STAMPS. NO TOXIC AND COMBUSTIBLE MATERIALS AS WOOD OR ANY OTHER KIND OF MATERIALS WILL BE ALLOWED ABOVE STOREFRONT OR CEILING, IN THE H.V.A.C. RETURN AIR PLENUM AREA, WITHIN ALL CAVITIES OR ABOVE SPRINKLER COVERAGE.

2.5 THE GENERAL CONTRACTOR SHALL PROVIDE CONCEALED BLOCKING AS REQUIRED FOR PROPER ANCHORAGE OF ALL STOCKROOM SHELVING STANDARDS TO BE INSTALLED. SURFACE APPLIED WOOD BLOCKING REQUIRED FOR THE ATTACHMENT OF MILLWORK SHALL BE PROVIDED BY THE GENERAL CONTRACTOR.

2.6 ONLY NEW FIRST CLASS MATERIALS AND GREATEST USABLE DIMENSION AVAILABLE SHALL BE USED. ALL WORK AND EQUIPMENT SHALL BE WARRANTED BY THE GENERAL CONTRACTOR FOR A MINIMUM OF ONE YEAR FROM THE DATE OF FINAL ACCEPTANCE EXCEPT FOR MANUFACTURER'S WARRANTIES, WHICH MAY BE LONGER.

2.7 G.C. TO ACCOUNT FOR AND INSPECT ALL, MILLWORK FIXTURES AND ASSORTED ACCESSORIES WITHIN 24 HOURS OF DELIVERY, TO ASSURE THE CONDITION AND QUANTITY OF THE AFOREMENTIONED ARE IN ACCORDANCE WITH THE SCHEDULES AND SPECIFICATIONS CONTAINED IN THESE CONSTRUCTION DOCUMENTS. NOTIFY THE TENANT AND THE APPROPRIATE DISTRIBUTORS WITHIN 24 HOURS IF THE CONDITION OR QUANTITY OF THE AFOREMENTIONED ITEMS ARE NOT IN ACCORDANCE WITH THE SCHEDULES AND SPECIFICATIONS CONTAINED IN THE CONTRACT DOCUMENTS.

2.8 G.C. TO SECURE MILLWORK TO WALLS WITH TENANT PROVIDED BRACKETS.

2.9 G.C. TO SECURE THE STOCKROOM SHELVING AT WALLS AND FLOOR WITH THE TENANT PROVIDED BRACKETS.

TENANT SPECIFICATIONS

0.0 TENANT SUPPLIED MATERIALS:

0.1 GENERAL CONTRACTOR IS RESPONSIBLE FOR RECEIVING ALL TENANT SUPPLIED MATERIALS AND SUPPLYING THE MANPOWER AS REQUIRED TO OFFLOAD SHIPMENTS.

0.2 GENERAL CONTRACTOR IS RESPONSIBLE FOR PROTECTING ALL TENANT SUPPLIED MATERIALS THROUGHOUT THE WORK, AND IS TO MAKE TOUCH UP REPAIRS AS REQUIRED.

1.0 FRAMING AND CARPENTRY:

1.1 WALLS, CEILINGS TO BE FRAME W/ MINIMUM 20ga. 1 5/8", 2 1/2", 3 5/8" AND 6" METAL STUDS @ 16" o.c. (OR AS SHOWN ON THE DRAWINGS).

1.2 STOREFRONT AND SOFFITS TO BE FRAMED W/ (MINIMUM) 16 ga. 3 5/8" AND 6" METAL STUDS @ 16" o.c. (OR AS SHOWN ON THE DRAWINGS).

1.3 UNLESS OTHERWISE NOTED, ALL INTERIOR PARTITIONS SHALL EXTEND A MINIMUM OF 6" ABOVE THE ADJACENT CEILING (REFER TO WALL TYPES ON PLANS).

1.4 INTERIOR PARTITIONS TO BE BRACED TO EXISTING MALL STRUCTURE EVERY 4'-0" @ 45° (REFER TO WALL TYPES ON PLANS).

1.5 UNLESS OTHERWISE NOTED, GYPSUM BOARD CEILINGS SHALL BE CONSTRUCTED WITH 7/8" METAL FURRING @ 16" O.C., 1 1/2" METAL CHANNEL @ 48" O.C. (MAX), AND GALVANIZED STEEL HANGER WIRE #12 @ 48" (MAX).

1.6 ALL DIMENSIONAL LUMBER, BLOCKING AND NAILERS TO BE FIRE RETARDANT. ALL WOOD TO BE NO. 2 HEM-FIR-SPRUCE OR NO. 2 SOUTHERN YELLOW PINE, UTILITY GRADE BOARDS TO COMPLY W/ PS-20.

1.7 ALL PAINT FINISH WOOD TRIM TO BE GRADE NUMBER ONE POPLAR. SMOOTH SANDED WITH TIGHT JOINTS, SCRAPED HORIZONTAL GLUED AND NAILED. NO BUTT JOINTS WILL BE ACCEPTED.

1.8 ALL MILLWORK CASES TO BE INSTALLED BY GENERAL CONTRACTOR.

1.9 PLYWOOD & MDF FOR GENERAL INTERIOR CARPENTRY SHALL BE 3/4" APA TRADEMARK C-D PLUGGED UL LABELED CLASS A FIRE-RETARDANT TREATED. EXPOSURE I PANELS COMPLYING W/ PS-1 PROVIDE TREATMENT THAT YIELD A FLAME SPREAD RATING NOT GREATER THAN 25 (PER ASTM E-34).

1.10 ALL BOLTS, CLIPS, HANGERS, NAILS, ETC. SHALL BE HOT DIPPED GALVANIZED.

2.0 DRYWALL:

2.1 RESERVED:

2.2 ALL DRYWALL JOINTS SHALL BE TAPED, FINISHED AND SANDED TO ACHIEVE A LEVEL 5 FINISH. METAL TRIMS SHALL BE USED AT ALL OUTSIDE CORNERS AND ALL EDGES NOT CONCEALED BY OTHER CONSTRUCTION UNLESS OTHER TREATMENT IS SPECIFICALLY INDICATED. VISIBLE JOINTS ARE NOT ACCEPTABLE.

2.3 ALL INTERIOR PARTITIONS AND CEILINGS, TO BE 5/8" TYPE "X" GYPSUM BOARD. USE 5/8" WATER RESISTANT GYPSUM BD. IN WASHROOM (REFER TO WALL TYPES ON PLANS).

2.4 ALL FIRE-RATED PARTITIONS TO BE 5/8" TYPE "X" GYPSUM BD. TO THE UNDERSIDE OF DECK ABOVE IN COMPLIANCE W/ ALL APPLICABLE CODES. UNLESS NOTED OTHERWISE ANY ADDITIONAL WORK TO BRING NEW OR EXISTING PARTITIONS TO CODE SHALL BE INCLUDED IN BASE BID.

2.5 ACOUSTICAL INSULATION TO BE UNFACED CLASS 1 FIBERGLASS, BATT CUT TO FIT & NON-COMBUSTIBLE AS PER ASTM E136.

2.6 CEILING FINISH TO BE UNIFORM AND FREE OF ANY VARIATIONS, TOOL MARKS, AND/OR RIDGES.

2.7 PROVIDE SEISMIC SPACES AND BRIDGES TO RESIST SEISMIC LOAD IN CONFORMITY OF APPLICABLE BUILDING CODES.

3.0 FINISHES:

3.1 PAINTING:

3.1.1 CONTRACTOR TO CONFIRM SUITABILITY OF ALL WALLS TO RECEIVE PAINT. GENERAL CONTRACTOR TO CONTACT ARCHITECT AND TENANT IF ANY EXISTING WALLS ARE NOT ACCEPTABLE TO RECEIVE FINISH AS SPECIFIED. POOR APPLICATION OVER UNSUITABLE SURFACES IS THE PAINTING CONTRACTOR'S RESPONSIBILITY. INCLUDE NECESSARY PREP WORK IN BASE BID.

3.1.2 RESERVED (NOT USED)

3.1.3 RESERVED

3.1.4 PAINTED SURFACES TO BE SMOOTH ROLLED OR BRUSHED W/ NO SKIPS LAPS OR STREAKS. SEE FINISH LEGEND FOR MANUFACTURER'S DESIGNATIONS.

3.1.5 ALL HVAC DIFFUSERS TO MATCH CEILING FINISH IN WHICH THEY OCCUR, UNLESS OTHERWISE NOTED ON REFLECTED CEILING PLAN.

3.1.6 PAINTING CONTRACTOR TO FILL AND TOUCH-UP ALL NAILS HOLES IN WOOD TRIM AND FINISH TO MATCH TRIM.

3.0 FINISHES: (CONT'D)

3.3 MILLWORK:

3.3.1 ALL MILLWORK AND CASEWORK TO COMPLY W/ 1994 AWI QUALITY STANDARDS FOR FINISH CARPENTRY & ARCHITECTURAL WOODWORKING CUSTOM GRADE OR BETTER.

3.3.2 SOME FIELD CUTTING & ASSEMBLY OF MILLWORK IS REQUIRED. FOLLOW SHOP DRAWINGS. ALL FIELD ASSEMBLY WORK TO BE SCRIBED & JOINED ACCURATELY.

3.4 TILE:

3.4.1 GENERAL CONTRACTOR SHALL INSURE THAT SURFACE IS CLEAN, LEVEL, FREE OF CRACKS AND READY TO RECEIVE NEW FINISH. GENERAL CONTRACTOR SHALL REPAIR AND / OR PREPARE SURFACE AS REQUIRED TO INSURE PROPER INSTALLATION OF TILE.

3.4.2 GENERAL CONTRACTOR SHALL USE AN APPROVED MASTIC, LATICRETE OR EQUIVALENT. ACCORDING TO INDUSTRY STANDARDS.

3.4.3 TILE TO BE INSTALLED PER MANUFACTURER'S SPECIFICATIONS.

3.4.4 TILE WALL BASE TO BE APPLIED TO EXPOSED WALL SURFACES ONLY. DO NOT INSTALL BEHIND MILLWORK.

3.10 ACOUSTICAL TILE CEILING:

3.10.1 PROVIDE ACCESSORIES TO RESIST SEISMIC LOAD IN CONFORMITY OF APPLICABLE BUILDING CODES.

4.0 SIGNAGE:

4.1 LANDLORD CRITERIA: SIGNAGE MANUFACTURER IS RESPONSIBLE FOR OBTAINING MALL SIGNAGE CRITERIA FROM GENERAL CONTRACTOR OR MALL, AND FOR COMPLIANCE WITH ALL MALL REQUIREMENTS REGARDING FABRICATION, FASTENER DETAILING, INSTALLATION, ETC... OF FINISHED SIGN. FINAL INSTALLATION MUST BE APPROVED BY LANDLORD.

4.2 SHOP DRAWINGS: SIGNAGE MANUFACTURER TO PROVIDE SHOP DRAWINGS FOR ALL SIGNAGE INCLUDING MAIN STOREFRONT SIGN AND GLASS APPLIED VINYL LETTERING. SHOP DRAWING SUBMITTAL TO CONFIRM ALL DIMENSIONS, POSITIONING, FASTENINGS, FINISHES, COLORS, ETC...

SIGNAGE CONTRACTOR IS RESPONSIBLE FOR SUBMITTING ARCHITECT APPROVED SHOP DRAWINGS TO LANDLORD FOR APPROVAL PRIOR TO FABRICATION.

4.3 NEW STOREFRONT SIGN PROVIDED AND INSTALLED BY OWNER. GENERAL CONTRACTOR TO COORDINATE SIGN INSTALLATION W/ SIGN MANUFACTURER.

4.4 MISCELLANEOUS INTERIOR SIGNAGE IS PROVIDED BY OWNER AND INSTALLED BY GENERAL CONTRACTOR AS SHOWN ON DRAWINGS.

4.5 VINYL DIE CUT DECALS PROVIDED & INSTALLED BY SIGN MANUFACTURER ON THE INSIDE OF THE STOREFRONT GLAZING (AS SHOWN ON DRAWINGS).

4.6 TOILET SYMBOL: G.C. TO PROVIDE APPROVED ACCESSIBILITY SYMBOL FOR UNISEX TOILET TO BE MOUNTED ON FACE OF TOILET DOOR. TRIANGLE WITH 12" SIDES MOUNTED ON 12" DIAMETER CIRCLE, BOTH OF 1/4" THICK MATERIAL; CONTRAST COLOR TO DOOR. PROVIDE SHOP DRAWINGS FOR VERIFICATION OF REQUIREMENTS AND MOUNTING HEIGHTS, ETC...

4.7 RESERVED (NOT USED)

4.8 STOREFRONT SIGN SHALL BE UNDER A SEPARATE BUILDING PERMIT.

4.9 SIGN CONTRACTOR RESPONSIBLE TO APPLY AND OBTAIN SIGN PERMIT AS REQUIRED.

5.0 STOREFRONT:

5.1 PROVIDE STRUCTURAL FRAMING AT STOREFRONT AS REQUIRED.

5.2 PROVIDE STRUCTURAL LINTEL AT GLASS LINE. VERIFY DETAILS W/ ARCHITECT.

5.3 G.C. IS RESPONSIBLE TO SUPPLY AND INSTALL FULL STOREFRONT SYSTEM, DOORS AND HARDWARE. REFER TO STOREFRONT PAGES & DOOR SCHEDULE FOR SPECIFICATIONS.

6.0 MECHANICAL AND ELECTRICAL SERVICES:

REFER TO ENG. DRAWINGS

7.0 MECHANICAL AND PLUMBING SERVICES:

REFER TO ENG. DRAWINGS

8.0 ELECTRICAL:

REFER TO ENG. DRAWINGS

Oculus Inc.
1 S. Memorial Dr., Suite 1500
St. Louis, MO 63102
314.367.6100
www.oculusinc.com

NINO'S Southern Sides

FOX POINT

8775 N. PORT WASHINGTON RD.
FOX POINT, WI 53217

#	Description	Date

WISCONSIN RONALD M. REIM A-10900 ST. LOUIS, MO ARCHITECT
December 5, 2024

These drawings/specifications are the property of Oculus Inc. They are furnished as contract documents only. The seal(s) and signature(s) apply only to the document to which they are affixed, and expressly disclaim any responsibility for all other plans, specifications, estimates, reports or other documents or instruments relating to or intended to be used for any part or parts of the architectural or engineering project. Additionally these drawings and seal(s) shall in no way convey or imply any type of warranty or certification relating to the performance of products and materials beyond those provided by their respective manufacturer.
© 2024 Oculus Inc.

ISSUED FOR PERMIT

Client Approval

SPECIFICATIONS

Project #	68423-WI01
Issue Date	12/5/2024
Scale	AS INDICATED
Drawn by	BJK
Checked by	CAP

A0.1

12/10/2024 1:56:49 PM FOX POINT

TI TEMPLATE V1.0.

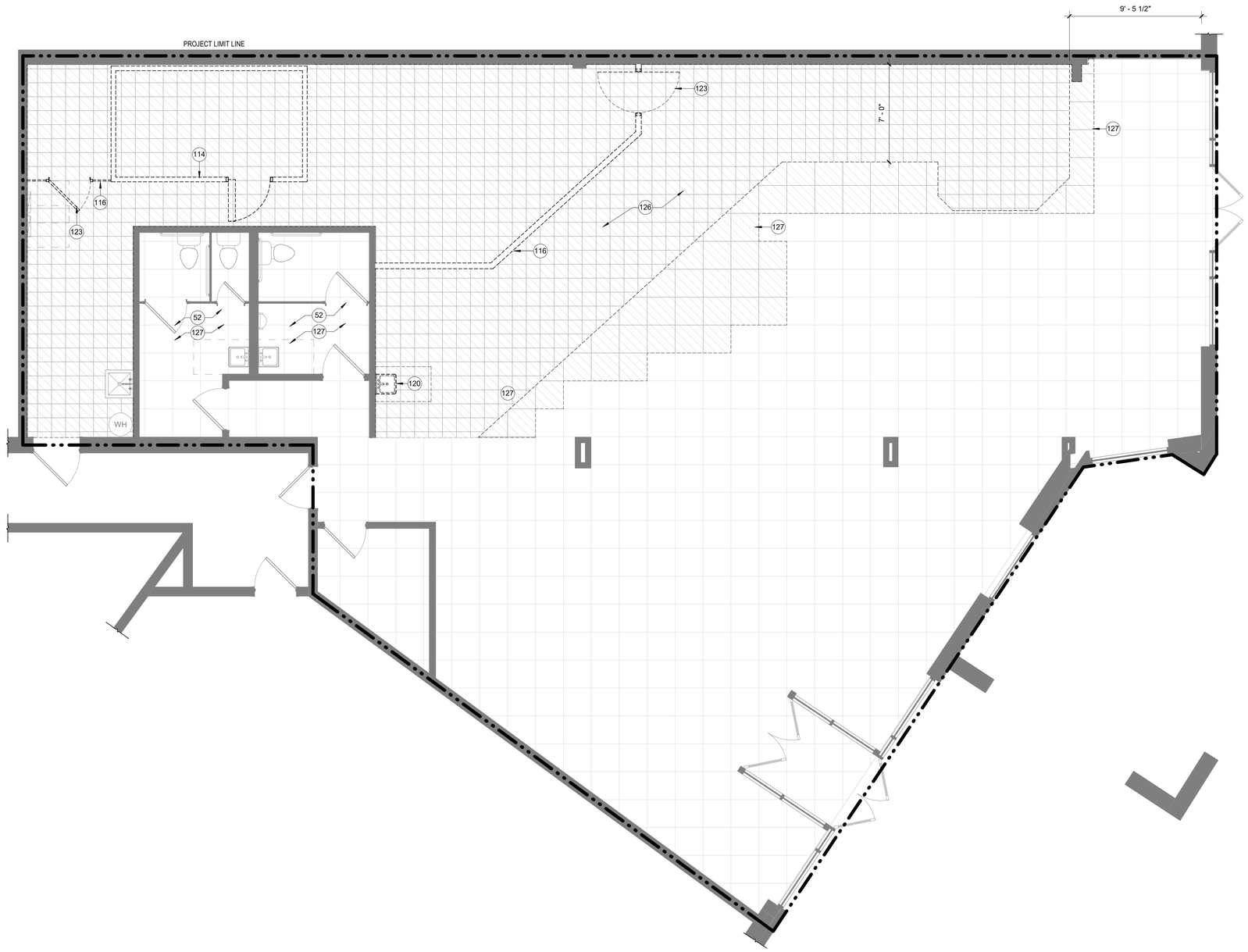

S1 DEMOLITION FLOOR PLAN
1/4" = 1'-0"

SHEET NOTES:

- PRIOR TO START OF WORK VERIFY SCOPE OF DEMOLITION INDICATED. ADJUST SCOPE OF DEMOLITION AS NEEDED TO ALLOW FOR PRIOR INSTALLATION OF NEW WORK.
- DEMO ITEMS INDICATED IN THEIR ENTIRETY TO SUBSTRATE. DEMO CONDUIT, CONDUCTORS, HANGERS, PIPING AND SIMILAR WORK TO SOURCE
- PROTECT EXISTING WORK INDICATED TO REMAIN FROM DAMAGE DURING PERFORMANCE OF THE WORK. RESTORE DAMAGED WORK TO ORIGINAL CONDITION IN MANNER TO ELIMINATE EVIDENCE OF REPAIR.
- DASHED LINES ON DEMOLITION PLANS REPRESENT ITEMS TO BE DEMOLISHED/REMOVED.

KEYNOTES:

KEY #	KEYNOTE TEXT
52	RESTROOM FINISHES AND FIXTURES TO REMAIN. GC TO CLEAN.
114	DEMO WALK IN COOLER.
116	DEMO NON-LOAD BEARING PARTITIONS AS INDICATED. PATCH & REPAIR EXISTING SURFACES DAMAGED BY DEMOLITION. PATCH & PREP TO RECEIVE NEW FINISHES AS SCHEDULED.
120	HAND SINK TO BE DEMOLISHED. CAP PLUMBING LINES PER CODE.
123	DOOR AND FRAME TO BE DEMOLISHED. SEE FLOOR PLAN FOR ADDITIONAL INFORMATION.
126	DEMO ALL EXISTING COUNTERS.
127	DEMO FLOORING INDICATED. COORDINATE WITH NEW WORK. PREPARE SURFACE FOR INSTALLATION OF NEW SIMILAR TILE.

LANDLORD NOTES:

Oculus Inc.
1 S. Memorial Dr., Suite 1500
St. Louis, MO 63102
314.367.6100
www.oculusinc.com

NINO'S Southern Sides

FOX POINT

8775 N. PORT WASHINGTON RD.
FOX POINT, WI 53217

#	Description	Date

WISCONSIN REGISTERED ARCHITECT CAP ST. LOUIS, MO

These drawings/specifications are the property of Oculus Inc. They are furnished as contract documents only. The seal(s) and signature(s) apply only to the document to which they are affixed, and expressly disclaim any responsibility for all other plans, specifications, estimates, reports or other documents or instruments relating to or intended to be used for any part or parts of the architectural or engineering project. Additionally these drawings and seal(s) shall in no way convey or imply any type of warranty or certification relating to the performance of products and materials beyond those provided by their respective manufacturer.
© 2024 Oculus Inc.

ISSUED FOR PERMIT

Client Approval

DEMOLITION FLOOR PLAN

Project #	68423-WI01
Issue Date	12/5/2024
Scale	AS INDICATED
Drawn by	BJK
Checked by	CAP

A1.0

12/10/2024 1:56:49 PM FOX POINT

TI TEMPLATE V1.0.

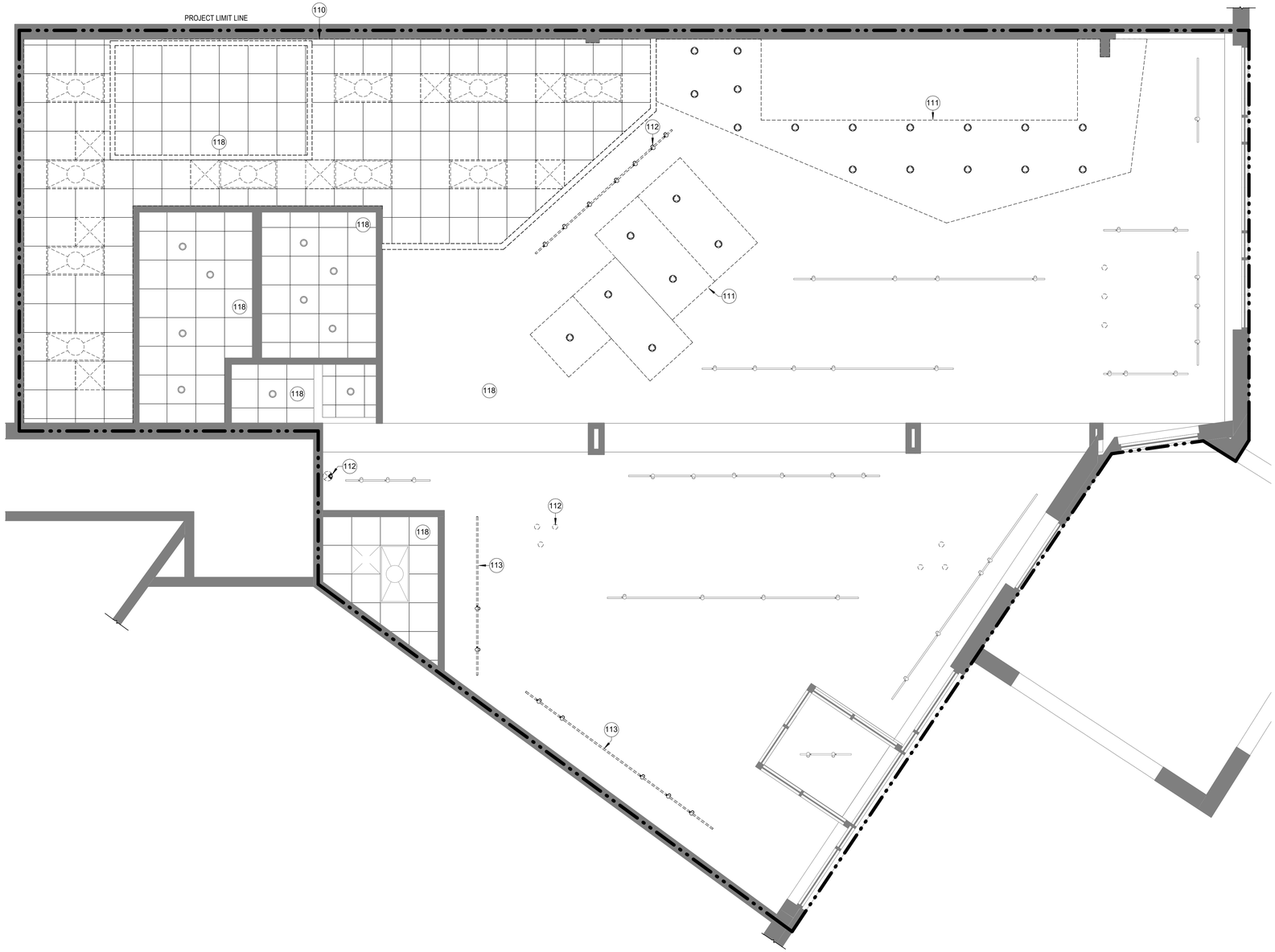

S1 DEMOLITION REFLECTED CEILING PLAN
1/4" = 1'-0"

SHEET NOTES:

- PRIOR TO START OF WORK VERIFY SCOPE OF DEMOLITION INDICATED. ADJUST SCOPE OF DEMOLITION AS NEEDED TO ALLOW FOR PRIOR INSTALLATION OF NEW WORK.
- DEMO ITEMS INDICATED IN THEIR ENTIRETY TO SUBSTRATE. DEMO CONDUIT, CONDUCTORS, HANGERS, PIPING AND SIMILAR WORK TO SOURCE
- PROTECT EXISTING WORK INDICATED TO REMAIN FROM DAMAGE DURING PERFORMANCE OF THE WORK. RESTORE DAMAGED WORK TO ORIGINAL CONDITION IN MANNER TO ELIMINATE EVIDENCE OF REPAIR.
- DASHED LINES ON DEMOLITION PLANS REPRESENT ITEMS TO BE DEMOLISHED/REMOVED.

KEYNOTES:

KEY #	KEYNOTE TEXT
110	DEMO PORTION OF CEILING. REFERENCE NEW WORK PLANS FOR LOCATION OF FIXTURES AND WALLS.
111	DEMO SOFFIT AND LIGHTING.
112	DEMO LIGHTING FIXTURE, TYP.
113	RELOCATE CEILING FIXTURE. COORDINATE WITH REFLECTED CEILING PLAN.
118	CEILING TILES, GRID AND LIGHTING TO REMAIN.

LANDLORD NOTES:

Oculus Inc.
1 S. Memorial Dr., Suite 1500
St. Louis, MO 63102
314.367.6100
www.oculusinc.com

NINO'S Southern Sides

FOX POINT

8775 N. PORT WASHINGTON RD.
FOX POINT, WI 53217

#	Description	Date

WISCONSIN
CHRISTOPHER A. PEGG
A-4801
ST. LOUIS, MO
December 5, 2024
ARCHITECT

These drawings/specifications are the property of Oculus Inc. They are furnished as contract documents only. The seal(s) and signature(s) apply only to the document to which they are affixed, and expressly disclaim any responsibility for all other plans, specifications, estimates, reports or other documents or instruments relating to or intended to be used for any part or parts of the architectural or engineering project. Additionally these drawings and seal(s) shall in no way convey or imply any type of warranty or certification relating to the performance of products and materials beyond those provided by their respective manufacturer.
© 2024 Oculus Inc.

ISSUED FOR PERMIT

Client Approval

DEMOLITION REFLECTIVE CEILING PLAN

Project #	68423-WI01
Issue Date	12/5/2024
Scale	AS INDICATED
Drawn by	BJK
Checked by	CAP

A1.1

12/10/2024 1:56:50 PM FOX POINT

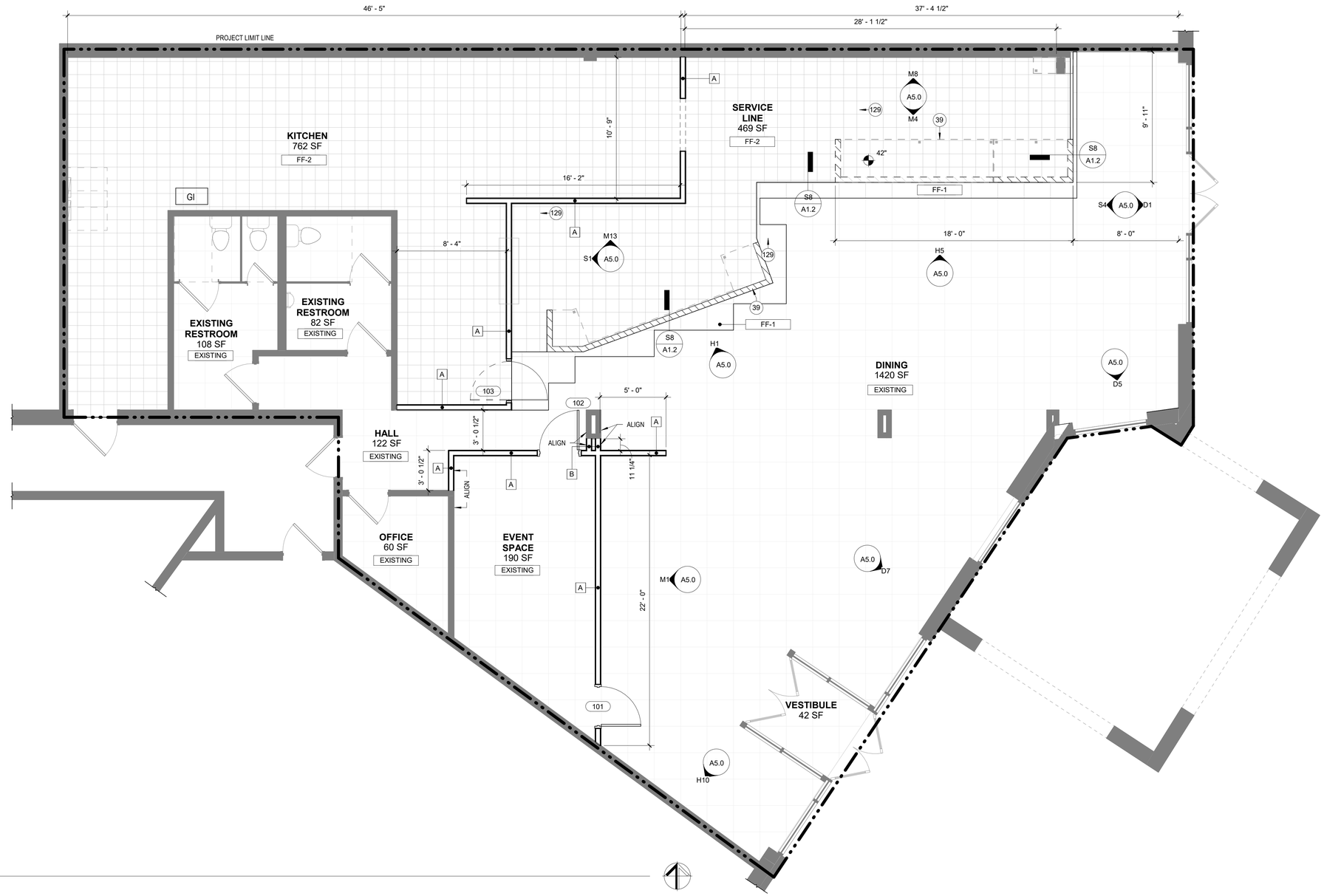

M1 FLOOR PLAN
1/4" = 1'-0"

KEYNOTES:

KEY #	KEYNOTE TEXT
39	OUTLINE OF COUNTER TOP/MILLWORK. SEE MILLWORK PLAN FOR ADDITIONAL INFORMATION.
129	INFILL FLOOR TILE WITH SIMILAR FLOOR TILE.

SHEET NOTES:

- NO PAINTING OR INTERIOR FINISHING SHALL BE DONE UNDER CONDITIONS WHICH WILL JEOPARDIZE THE QUALITY OR APPEARANCE OF SUCH WORK. ENSURE FLAME SPREAD IS CLASS 1.
- PATCH AND REPAIR SURFACES EXPOSED TO VIEW IN MANNER TO ELIMINATE EVIDENCE OF REPAIR WORK. FINISH GYP. BD. EXPOSED TO VIEW TO LEVEL 4. PREPARE SURFACES IN ACCORDANCE WITH FINISH MATERIAL MANUF. INSTRUCTIONS AND RECOMMENDATIONS PRIOR TO APPLYING FINISH MATERIAL.
- SEE FINISH PLAN, ELEVATIONS AND DETAILS FOR CLARIFICATION OF FINISHES.
- ALL VERTICAL SURFACES UNO SHALL RECEIVE WALL BASE.
- ALLOW FOR DELIVERY LEAD TIMES FOR ALL CUSTOM FINISHES WITHIN THE CONSTRUCTION SCHEDULE. CONFIRM ALL DELIVERY TIMES. NOTIFY ARCHITECT OF ANY EXCESSIVE LEAD TIMES IMMEDIATELY.
- EXAMINE ALL FINISH SURFACES AFTER COMPLETION OF WORK AND "TOUCH-UP" AS REQUIRED.
- UPON COMPLETION, REMOVE ALL PAINT FROM WHERE IT HAS SPILLED, SPLASHED OR SPLATTERED ON EXPOSED SURFACES.
- ALL INTERSECTIONS OF FLOOR FINISH MATERIALS SHALL BE LOCATED DIRECTLY UNDER CENTER OF DOOR, WHERE OCCURS. UNO
- SEE PARTITION TYPES AND DOOR AND FRAME TYPES
- SEE FINISH SCHEDULE FOR FINISH INFORMATION

WALL / DOOR LEGEND

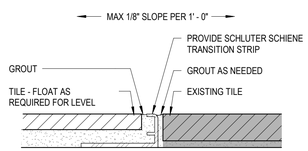

S8 FLOORING TRANSITION DETAIL
12" = 1'-0"

NINO'S FINISH SCHEDULE

Tag	Material	Manufacturer	Series/Product #	Color	Location	Dimensions	Additional Information
Floors							
FF-1	SLATE	EXISTING TO REMAIN / DALTILE	NATURAL STONE...	CALIFORNIA GOLD...	Dining Room	16x16	SPEC LISTED IS CLOSE MATCH TO EXISTING. SEE FINISH SCOPE NOTES BELOW
FF-1 ALT	PORCELAIN	DALTILE	SLATE ATTACHE	MULIT BROWN		12x24	BID ALTERNATE: IF FRONT OF HOUSE FLOORING CANNOT BE CLEANED, USE THIS REPLACEMENT SPEC FOR ALL NEW FRONT OF HOUSE FLOORING. MAPEI KERAPOXY CQ GROUT 5007 CHOCOLATE (OR EQUAL). 3" BULLNOSE TILE AVAILABLE FOR WALL BASE.
FF-2	QUARRY TILE	AMERICAN OLEAN	QUARRY NATURALS	SHADOW GRAY	Service Line and Kitchen	6x6	MAPEI KERAPOXY CQ GROUT 5011 SAHARAH BEIGE (OR EQUAL)
Wall Base							
WB-1	TILE	EXISTING BLACK TILE BASE TO REMAIN			Dining		GC TO PROVIDE NEW BLACK TILE BASE TO MATCH EXISTING AT NEW CONSTRUCTION WALLS.
WB-2	QUARRY TILE	AMERICAN OLEAN	QUARRY NATURALS	SHADOW GRAY	Service Line and Kitchen	5x6 3/8" COVE BASE	MAPEI KERAPOXY CQ GROUT 5011 SAHARAH BEIGE (OR EQUAL)
Wall Covering							
WT-1	CERAMIC TILE	DALTILE	COLOR WHEEL CLASSICS	ARCTIC WHITE 0190	Service line, front counters	3x6x5/16	USE METAL EDGING TRIM AT ALL OUTSIDE CORNERS AND EDGES OF TILE (SCHLUTER OR EQUAL). MAPEI KERAPOXY CQ GROUT 5011 SAHARAH BEIGE (OR EQUAL)
FRP-1	FIBER REINFORCED...	MARLITE (OR EQUAL)	PEBBLED	P100 WHITE	BOH Walls	4x8	
Paint							
PT-1	PAINT	SHERWIN WILLIAMS	LOW VOC	SW6155 RICE GRAIN	EXPOSED GYP WALLS AND CEILINGS	—	SATIN FINISH FOR ALL CUSTOMER AREA GYP WALLS AND CEILINGS; SEMI-GLOSS FOR ALL FOOD PRODUCTION AREA GYP WALLS AND CEILINGS
PT-2	PAINT	SHERWIN WILLIAMS	LOW VOC	SW6096 JUTE BROWN	ACCENT WALLS		SATIN
Counters							
CT-1	SOLID SURFACE	CORIAN	SOLID SURFACE	SAVANNAH	MAIN FOH COUTNER TOPS		
CT-2	QUARTZ	CORIAN	QUARTZ	CALACATTA NATURA	COUTER TOPS EXPOSED TO HEAT		

Oculus Inc.
1 S. Memorial Dr., Suite 1500
St. Louis, MO 63102
314.367.6100
www.oculusinc.com

NINO'S Southern Sides

FOX POINT

8775 N. PORT WASHINGTON RD.
FOX POINT, WI 53217

#	Description	Date

WISCONSIN CHAD A. PIERCE S-7820 ST. LOUIS, MO ARCHITECT
December 5, 2024

These drawings/specifications are the property of Oculus Inc. They are furnished as contract documents only. The seal(s) and signature(s) apply only to the document to which they are affixed, and expressly disclaim any responsibility for all other plans, specifications, estimates, reports or other documents or instruments relating to or intended to be used for any part or parts of the architectural or engineering project. Additionally these drawings and seal(s) shall in no way convey or imply any type of warranty or certification relating to the performance of products and materials beyond those provided by their respective manufacturer.
© 2024 Oculus Inc.

ISSUED FOR PERMIT

Client Approval

FLOOR & FINISH PLAN

Project #	68423-WI01
Issue Date	12/5/2024
Scale	AS INDICATED
Drawn by	BJK
Checked by	CAP

A1.2

TI TEMPLATE V1.0.

12/10/2024 1:58:51 PM FOX POINT

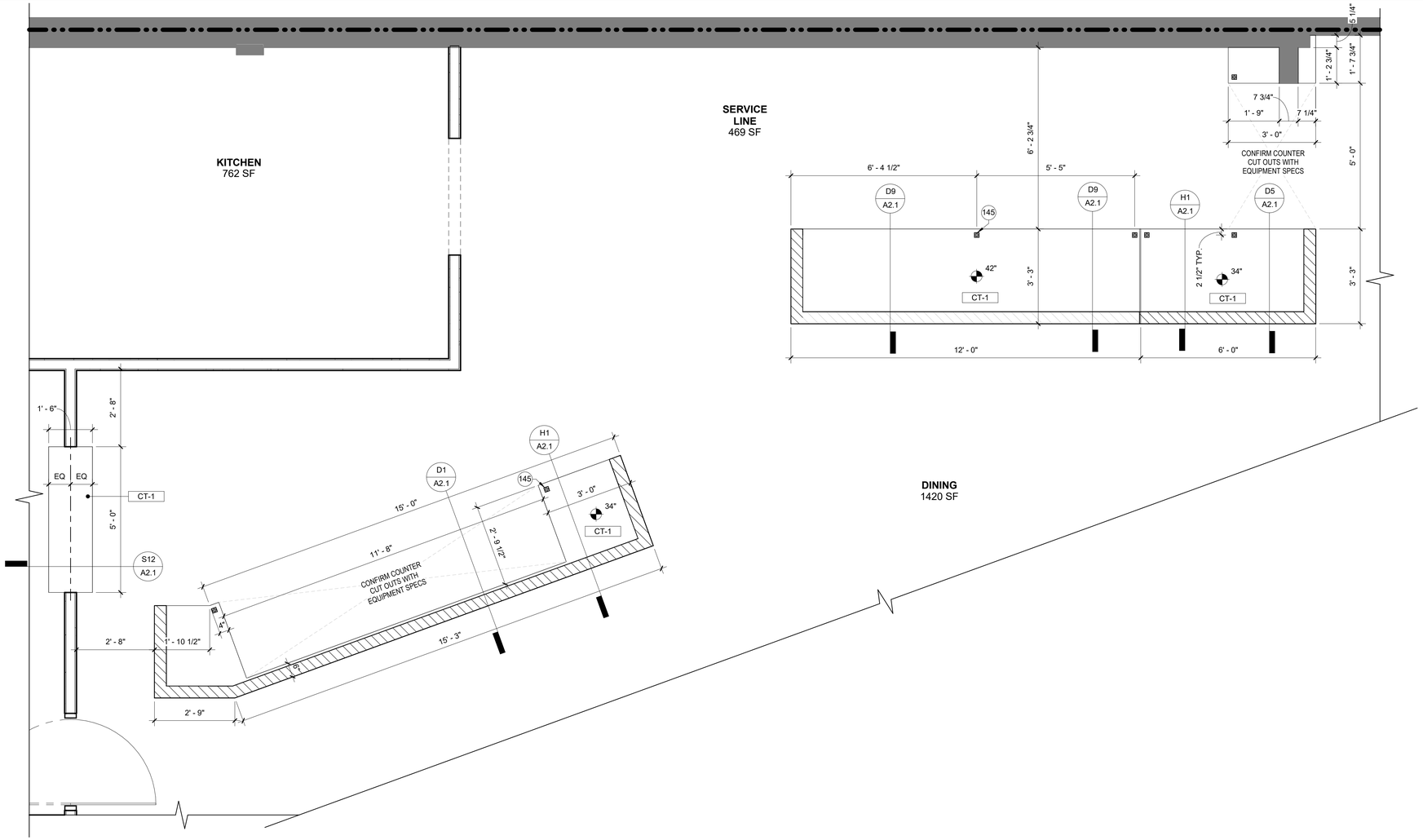

L1 MILLWORK & COUNTERTOP PLAN

1/2" = 1'-0"

SHEET NOTES:

- NO PAINTING OR INTERIOR FINISHING SHALL BE DONE UNDER CONDITIONS WHICH WILL JEOPARDIZE THE QUALITY OR APPEARANCE OF SUCH WORK. ENSURE FLAME SPREAD IS CLASS 1.
- PATCH AND REPAIR SURFACES EXPOSED TO VIEW IN MANNER TO ELIMINATE EVIDENCE OF REPAIR WORK. FINISH GYP. BD. EXPOSED TO VIEW TO LEVEL 4. PREPARE SURFACES IN ACCORDANCE WITH FINISH MATERIAL MANUF. INSTRUCTIONS AND RECOMMENDATIONS PRIOR TO APPLYING FINISH MATERIAL.
- SEE FINISH PLAN, ELEVATIONS AND DETAILS FOR CLARIFICATION OF FINISHES.
- ALL VERTICAL SURFACES UNO SHALL RECEIVE WALL BASE.
- ALLOW FOR DELIVERY LEAD TIMES FOR ALL CUSTOM FINISHES WITHIN THE CONSTRUCTION SCHEDULE. CONFIRM ALL DELIVERY TIMES. NOTIFY ARCHITECT OF ANY EXCESSIVE LEAD TIMES IMMEDIATELY.
- EXAMINE ALL FINISH SURFACES AFTER COMPLETION OF WORK AND "TOUCH-UP" AS REQUIRED.
- UPON COMPLETION, REMOVE ALL PAINT FROM WHERE IT HAS SPILLED, SPLASHED OR SPLATTERED ON EXPOSED SURFACES.
- ALL INTERSECTIONS OF FLOOR FINISH MATERIALS SHALL BE LOCATED DIRECTLY UNDER CENTER OF DOOR, WHERE OCCURS. UNO
- SEE PARTITION TYPES AND DOOR AND FRAME TYPES
- SEE FINISH SCHEDULE FOR FINISH INFORMATION

KEYNOTES:

KEY #	KEYNOTE TEXT
145	2" x 2" STAINLESS STEEL SUPPORT LEG PROVIDED AND INSTALLED BY GC. GC TO ANCHOR IN PLACE AFTER EQUIPMENT INSTALLATION.

Oculus Inc.
1 S. Memorial Dr., Suite 1500
St. Louis, MO 63102
314.367.6100
www.oculusinc.com

NINO'S Southern Sides

FOX POINT

8775 N. PORT WASHINGTON RD.
FOX POINT, WI 53217

#	Description	Date

WISCONSIN REGISTERED ARCHITECT
Jeremy C. Pauls
December 5, 2024

These drawings/specifications are the property of Oculus Inc. They are furnished as contract documents only. The seal(s) and signature(s) apply only to the document to which they are affixed, and expressly disclaim any responsibility for all other plans, specifications, estimates, reports or other documents or instruments relating to or intended to be used for any part or parts of the architectural or engineering project. Additionally these drawings and seal(s) shall in no way convey or imply any type of warranty or certification relating to the performance of products and materials beyond those provided by their respective manufacturer.
© 2024 Oculus Inc.

ISSUED FOR PERMIT

Client Approval

MILLWORK & COUNTERTOP PLAN

Project #	68423-WI01
Issue Date	12/5/2024
Scale	AS INDICATED
Drawn by	BJK
Checked by	CAP

A1.3

TI TEMPLATE V1.0.

12/10/2024 1:56:52 PM FOX POINT

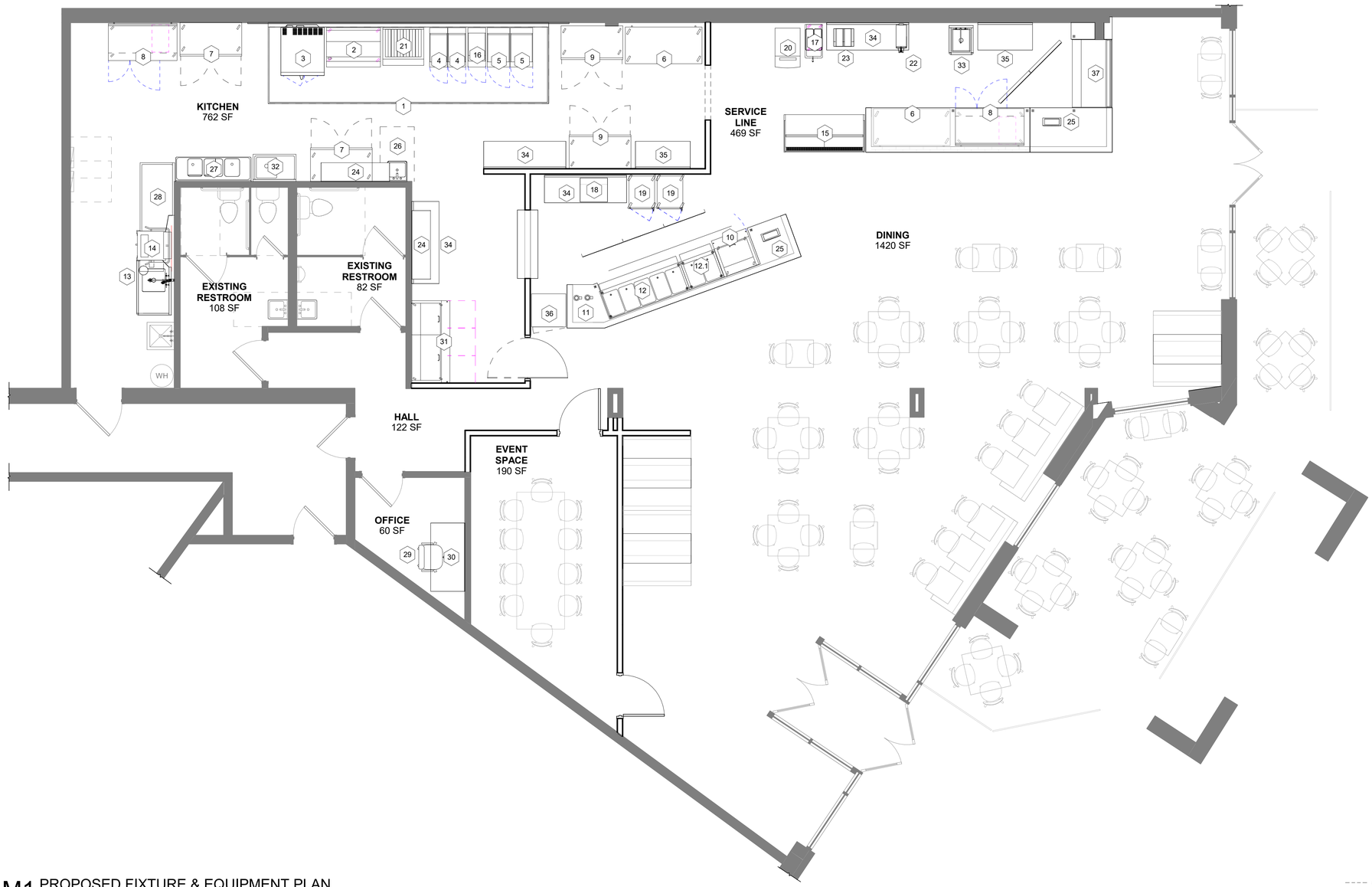

M1 PROPOSED FIXTURE & EQUIPMENT PLAN

1/4" = 1'-0"

– – – – = DASHED LINE INDICATES UNDER COUNTER EQUIPMENT

EQUIPMENT SCHEDULE: ALL FURNITURE TO BE PROVIDED AND COORDINATE BY THE OWNER

Specialty Equipment Schedule

Type Mark	Count	Description	Manufacturer	Model
1	1	20' Exhaust Hood	Captive Aire	-
2	1	Range 48" 8 Burner	Atosa	AGR-8B-NG
3	1	Convection Oven -Gas Dbl Deck	Falcon Food Service Equipment	ACO-2
4	2	Gas Floor Fryer 42- 50LB	Pitco Frialator	45-C+S
5	2	Gas Floor Fryer 65-80 LB	Pitco Frialator	65-C+S
6	2	Work Top Freezer	Falcon Food Service Equipment	AWT-60F
7	2	Reach In Freezer	Falcon Food Service Equipment	G20010-032
8	2	Refrigerated Work Top	Falcon Food Service Equipment	TWT-60-32-HC
9	2	Reach In Refrigerator	Falcon Food Service Equipment	G20010-032
10	1	Megatop Sandwich/Salad Prep Refrigerator	Falcon Food Service Equipment	TFP-32-12M
11	2	Buffet Warmer	Vollrath	46060
12	1	Hot Food Serving Counter	Vollrath	38005
12.1	1	Hot Soup Serving Counter	Vollrath	38002
13	1	Disposer	Salvajor	B-3942
14	1	Dishwasher, Door Type, Ventless	CMA Dishmachines	180-VL FL
15	1	Display Case Refriderated	Turbo Air	ADC-163
16	1	Fry Dump Station	Pitco Frialator	SSHBNB55
17	1	Frozen Yogurt Machine	Taylor	C723-33
18	1	Carving Station	Vollrath	46670
19	2	Heated Holding Cabinet	Alto-Shaam	100-UP-QS
20	1	Ice Machine	Scotsman	C0522MA=18
21	1	Charbroiler	Falcon Food Service Equipment	ACB-36
22	1	Coffee Brewer w/1 Satellites	Bunn	23001-006

Specialty Equipment Schedule

Type Mark	Count	Description	Manufacturer	Model
23	1	Drink Dispenser	CrathCo	D25-4
24	3	WALL SHELF	BY OWNER	BY OWNER
25	2	POS Register	By Onwer	-
26	1	Wall-Mounted Hand Sink	By Owner	-
27	1	3- Comp Sink w/ Faucet and Accessories	John Boos	E3S8-1416-12T12
28	1	Clean Dish Table	John Boos	CDT6-S60GBK-L
29	1	Office Chair	By Owner	-
30	1	Office Desk	By Owner	-
31	1	DRAWERED FOOD PREP UNIT	John Boos	TFP-72-30M-D-6
32	1	PREP SINK	John Boos	1B16204-1D18L
33	1	SINK, 1 COMPARTMENT	John Boos	B-0231-CC-CR
34	4	WORK TABLE	John Boos	ST6R5-3072SBK
35	2	WORK TABLE	John Boos	ST6R5-3048SBK
36	1	SINGLE DOOR VISI COOLER	Falcon Food Service Equipment	AGM-22
37	1	BAKERY DISPLAY CASE	Federal Industries	CGHIS-1

SHEET NOTES:

- SEE A2.0 FOR PARTITION TYPES.
- MAINTAIN EXISTING FIRE RATINGS AT TENANT SEPARATION WALLS DURING DEMOLITION/CONSTRUCTION ACTIVITIES
- REFERENCE FINISH PLANS FOR FINISH INFORMATION AND FLOOR TRANSITION LOCATIONS/DIMENSIONS.
- PROVIDE BLOCKING FOR ALL WALL MOUNTED EQUIPMENT AND FIXTURES.

Oculus Inc.
1 S. Memorial Dr., Suite 1500
St. Louis, MO 63102
314.367.6100
www.oculusinc.com

NINO'S Southern Sides

FOX POINT

8775 N. PORT WASHINGTON RD.
FOX POINT, WI 53217

#	Description	Date

These drawings/specifications are the property of Oculus Inc. They are furnished as contract documents only. The seal(s) and signature(s) apply only to the document to which they are affixed, and expressly disclaim any responsibility for all other plans, specifications, estimates, reports or other documents or instruments relating to or intended to be used for any part or parts of the architectural or engineering project. Additionally these drawings and seal(s) shall in no way convey or imply any type of warranty or certification relating to the performance of products and materials beyond those provided by their respective manufacturer.
© 2024 Oculus Inc.

ISSUED FOR PERMIT

Client Approval

FIXTURE AND EQUIPMENT PLAN

Project #	68423-WI01
Issue Date	12/5/2024
Scale	AS INDICATED
Drawn by	BJK
Checked by	CAP

A1.4

TI TEMPLATE V1.0.

12/10/2024 1:56:53 PM FOX POINT

TI TEMPLATE V1.0.

DOOR SCHEDULE

DOORS						FRAMES		
MARK	HEIGHT	WIDTH	TYPE	FINISH	HARDWARE	TYPE	FINISH	NOTES
101	7' - 0"	3' - 0"	D2	PT-1	SET B	F1	PT-1	
102	7' - 0"	3' - 0"	D2	PT-1	SET B	F1	PT-1	
103	6' - 8"	3' - 0"	D1	SATIN ANO	SET A	F2	PT-1	

FRAME TYPES

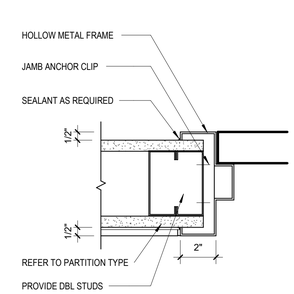

F1

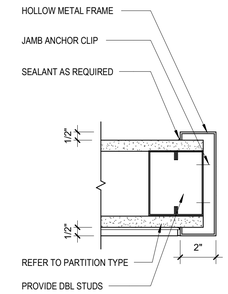

F2

DOOR TYPES

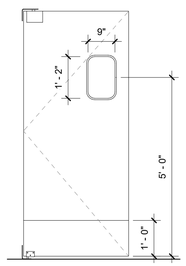

D1
ELIASON DOOR

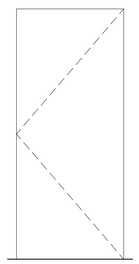

D2
FLUSH DOOR
S.C. WD.

HARDWARE SETS

SET A:

DOOR: ELIASON CORPORATION SWING DOOR
MODEL #LWP-3
FINISH: STANDARD FINISH - SATIN ANODIZED
KICKPLATE: 12" STANDARD STAINLESS STEEL BOTH SIDES

SET B:
ADA LEVER HARDWARE EQUIV TO SCHLAGE RHODES
PRIVACY LOCKSET: ANSI F76, GRADE 1, EQUIV TO SCHLAGE ND40
HARDWARE FINISH: #626 SATIN CHROME (26D)
AUTO-CLOSER: ANSI A156.4, GRADE 1, EQUIV TO LCN 4041
WALL-BUMPER: GLYNN-JOHNSON 50C AT HANDLE
PLATES: 8" H x 16 GA S/S KICK PLATE AT BOTH SIDES OF DOOR

HARDWARE NOTES:
1. PRODUCTS EQUAL TO ITEMS SPECIFIED WILL BE ALLOWED PER APPROVAL.
2. ANY EXISTING "THUMBTURN" OR "KEYED" CYLINDER LOCK FROM THE INSIDE TO BE EXTENDED-LENGTH "ACCESSIBLE" LEVERS.
3. GC TO VERIFY ALL EXISTING DOOR HARDWARE IS IN WORKING ORDER IN LIKE NEW CONDITION AND REPLACE ANY DAMAGED COMPONENTS WITH NEW OF EQUAL OR GREATER QUALITY.

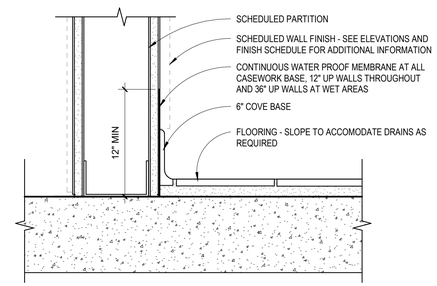

H9 COVE BASE DETAIL - TYPICAL
1 1/2" = 1'-0"

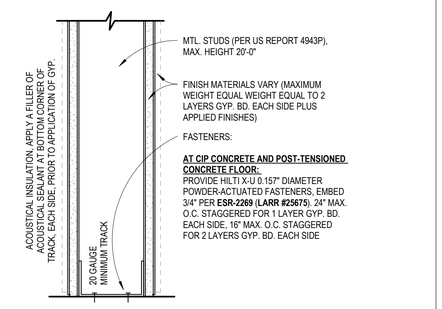

H13 PARTITION BASE
1 1/2" = 1'-0"

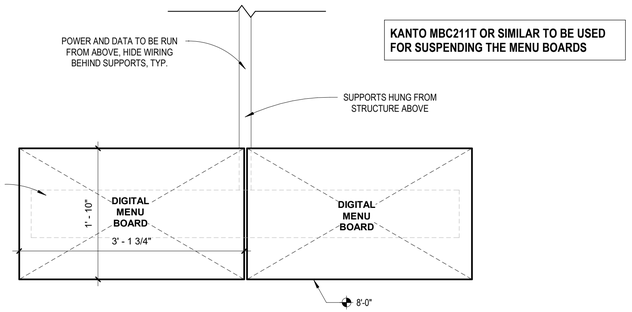

M1 (2) DIGITAL MENU BOARD DISPLAY
1" = 1'-0"

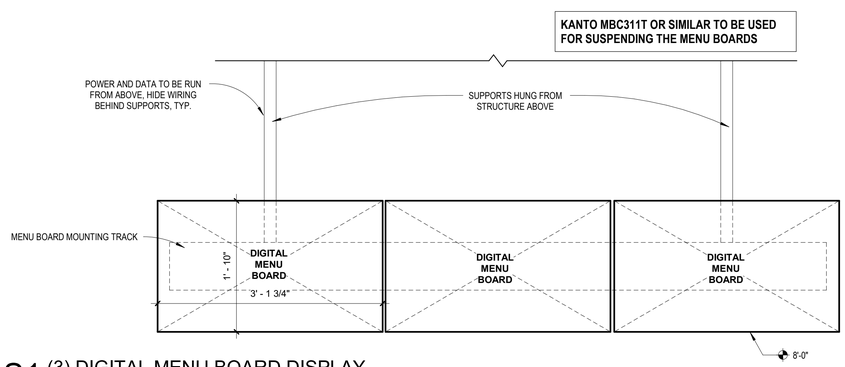

S1 (3) DIGITAL MENU BOARD DISPLAY
1" = 1'-0"

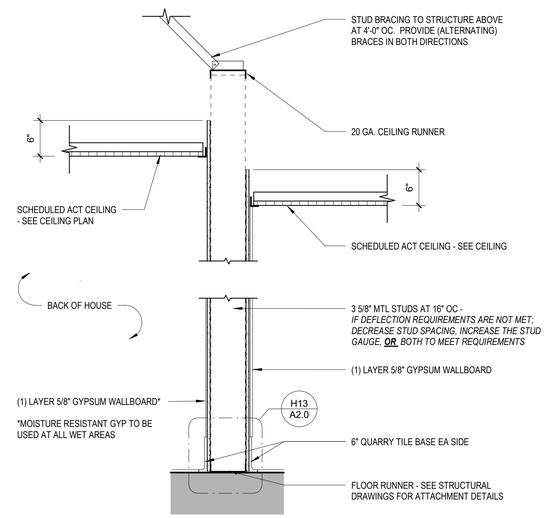

A **4 7/8" GYPSUM WALLBOARD, STEEL STUDS**
NON RATED PARTITION, NON LOAD-BEARING

A NON-RATED PARTITION
NOT TO SCALE

Oculus Inc.
1 S. Memorial Dr., Suite 1500
St. Louis, MO 63102
314.367.6100
www.oculusinc.com

NINO'S Southern Sides

FOX POINT
8775 N. PORT WASHINGTON RD.
FOX POINT, WI 53217

#	Description	Date

WISCONSIN
MICHAEL A. GRECO
ARCHITECT
Licensed on 5-10-2024

These drawings/specifications are the property of Oculus Inc. They are furnished as contract documents only. The seal(s) and signature(s) apply only to the document to which they are affixed, and expressly disclaim any responsibility for all other plans, specifications, estimates, reports or other documents or instruments relating to or intended to be used for any part or parts of the architectural or engineering project. Additionally these drawings and seal(s) shall in no way convey or imply any type of warranty or certification relating to the performance of products and materials beyond those provided by their respective manufacturer.
© 2024 Oculus Inc.

ISSUED FOR PERMIT

Client Approval

PARTITION TYPES & DOOR TYPES

Project #	68423-WI01
Issue Date	12/5/2024
Scale	AS INDICATED
Drawn by	BJK
Checked by	CAP

A2.0

12/10/2024 1:58:54 PM FOX POINT

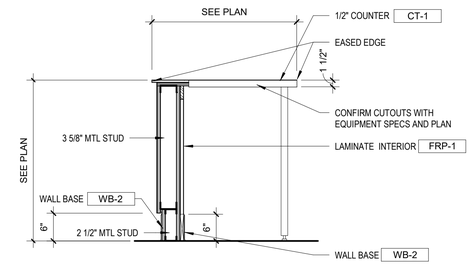

D1 SECTION @ BUFFET COUNTER
3/4" = 1'-0"

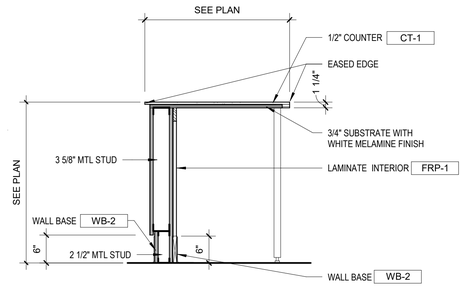

D5 SECTION @ FRONT COUNTER
3/4" = 1'-0"

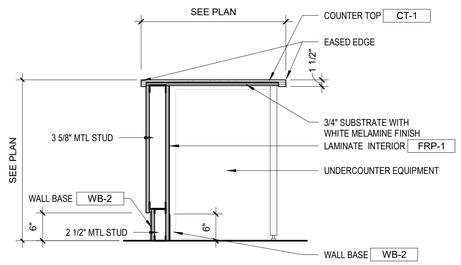

D9 SECTION @ UNDER COUNTER FRIDGE
3/4" = 1'-0"

MILLWORK NOTES:

- ALL WOOD BLOCKING TO BE FIRE RETARDANT TREATED WOOD.
- REFER TO ELEVATIONS AND TO FINISHES LEGEND ON FOR FINISH DESIGNATIONS.
- FINISH ALL EXPOSED SURFACES OF CABINETS WITH FINISH INDICATED IN ELEVATION AND SECTION.
- GC TO PROVIDE ALL ADJUTABLE STAINLESS STEEL SUPPORT LEGS
- CABINETRY/CASEWORK CONTRACTOR TO PROVIDE SIDE AND BACK SPLASHES AT ALL COUNTERS - PROVIDE ACCESS INTO ALL CORNER CABINETS - DO NOT CREATE ANY 'DEAD END' CABINETS
- ALL EQUIPMENT TO BE PROVIDED BY EQUIPMENT VENDOR INSTALLED BY GC - SEE EQUIPMENT PLANS AND EQUIPMENT SCHEDULE FOR ADDITIONAL INFORMATION
- ALL ELECTRICAL OUTLETS FOR COUNTER TOP EQUIPMENT ARE TO BE LOCATED ABOVE BACKSPLASH HEIGHT WHEN POSSIBLE. ALLL POWER FOR UNDER COUNTER EQUIPMENT TO BE LOCATED BELOW COUNTER. SEE ELECTRICAL DRAWINGS FOR ADDITIONAL INFORMATION

NOTE: WATER PROOFING MEMBRANE TO TURN/WRAP UP ALL CASEWORK BEHIND INDICATED 6" BASE FINISH

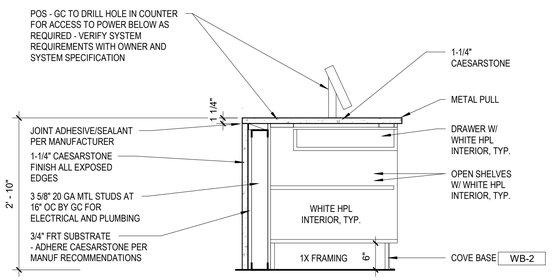

H1 SECTION @ POS
3/4" = 1'-0"

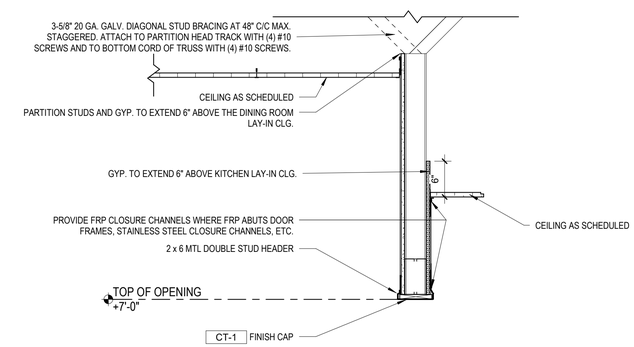

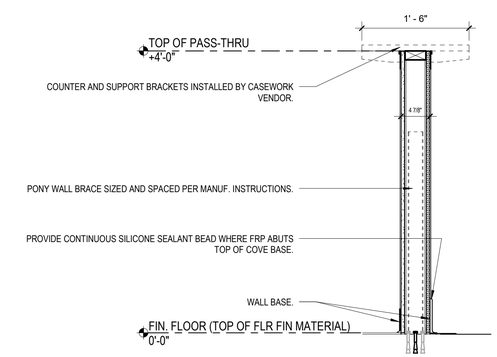

S12 PASS THRU COUNTER SECTION
1" = 1'-0"

Oculus Inc.
1 S. Memorial Dr., Suite 1500
St. Louis, MO 63102
314.367.6100
www.oculusinc.com

NINO'S Southern Sides

FOX POINT

8775 N. PORT WASHINGTON RD.
FOX POINT, WI 53217

#	Description	Date

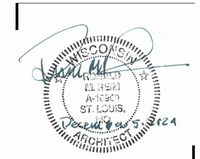

These drawings/specifications are the property of Oculus Inc. They are furnished as contract documents only. The seal(s) and signature(s) apply only to the document to which they are affixed, and expressly disclaim any responsibility for all other plans, specifications, estimates, reports or other documents or instruments relating to or intended to be used for any part or parts of the architectural or engineering project. Additionally these drawings and seal(s) shall in no way convey or imply any type of warranty or certification relating to the performance of products and materials beyond those provided by their respective manufacturer.
© 2024 Oculus Inc.

ISSUED FOR PERMIT

Client Approval

MILLWORK DETAILS

Project #	68423-WI01
Issue Date	12/5/2024
Scale	AS INDICATED
Drawn by	BJK
Checked by	CAP

A2.1

TI TEMPLATE V1.0.

12/10/2024 1:56:55 PM FOX POINT

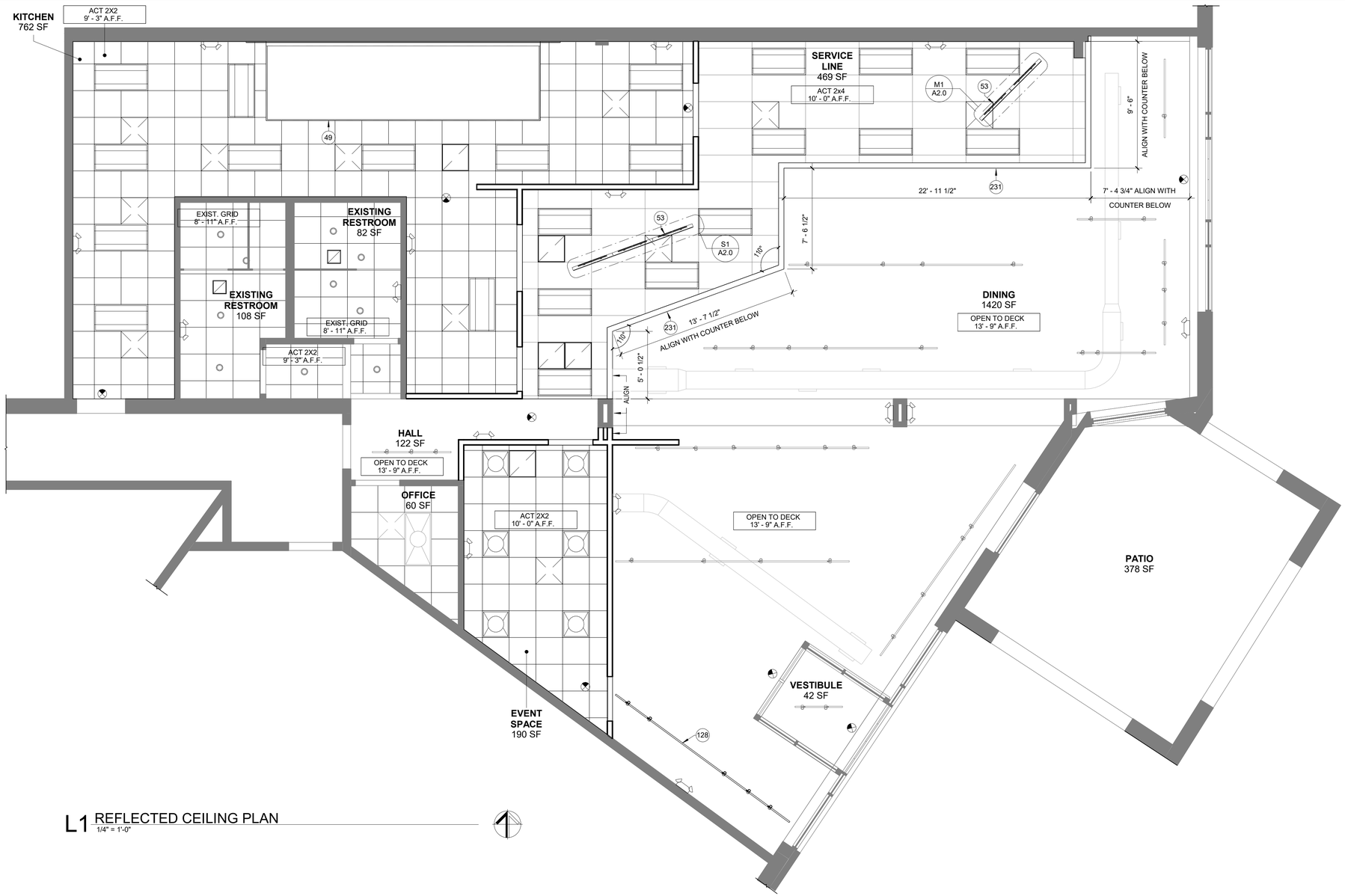

L1 REFLECTED CEILING PLAN
1/4" = 1'-0"

LIGHTING LEGEND:

- LED FIXTURE (2x2, 2X4, ETC).
- RECESSED LED WALL WASHER LIGHT FIXTURE. SEE SCHEDULE.
- RECESSED LED CAN LIGHT. SEE SCHEDULE.
- SUSPENDED PENDANT FIXTURE. SEE ELECTRICAL.
- EXIT LIGHT. SEE SCHEDULE.
- SPRINKLER SYSTEM. FOR REFERENCE ONLY.
- DIFFUSERS AND RETURNS. FOR REFERENCE ONLY. "N" DESIGNATION DENOTES NEW FIXTURE (TYP.)

SHEET NOTES

- SEE A2.0 FOR PARTITION TYPES.
- MAINTAIN EXISTING FIRE RATINGS AT TENANT SEPARATION WALLS DURING DEMOLITION/CONSTRUCTION ACTIVITIES
- REFERENCE FINISH PLANS FOR FINISH INFORMATION AND FLOOR TRANSITION LOCATIONS/DIMENSIONS.
- PROVIDE BLOCKING FOR ALL WALL MOUNTED EQUIPMENT AND FIXTURES.

KEYNOTES

KEY #	KEYNOTE TEXT
49	EXHAUST HOOD, REFERENCE MECHANICAL PLANS FOR MORE INFORMATION.
53	NEW DIGITAL MENU BOARD.
128	RELOCATED LIGHTING FIXTURE.
231	NEW GYP BULKHEAD - 5/8" GYP OVER 3 5/8" MTL STUD FRAMING AT 16" OC TO DECK ABOVE. PAINT ALL EXPOSED GYP SURFACES (PT-1)

Oculus Inc.
1 S. Memorial Dr., Suite 1500
St. Louis, MO 63102
314.367.6100
www.oculusinc.com

NINO'S Southern Sides

FOX POINT

8775 N. PORT WASHINGTON RD.
FOX POINT, WI 53217

#	Description	Date

These drawings/specifications are the property of Oculus Inc. They are furnished as contract documents only. The seal(s) and signature(s) apply only to the document to which they are affixed, and expressly disclaim any responsibility for all other plans, specifications, estimates, reports or other documents or instruments relating to or intended to be used for any part or parts of the architectural or engineering project. Additionally these drawings and seal(s) shall in no way convey or imply any type of warranty or certification relating to the performance of products and materials beyond those provided by their respective manufacturer.
© 2024 Oculus Inc.

ISSUED FOR PERMIT

Client Approval

REFLECTED CEILING PLAN

Project #	68423-WI01
Issue Date	12/5/2024
Scale	AS INDICATED
Drawn by	BJK
Checked by	CAP

A3.0

TI TEMPLATE V1.0

12/10/2024 1:56:55 PM FOX POINT

TI TEMPLATE V1.0

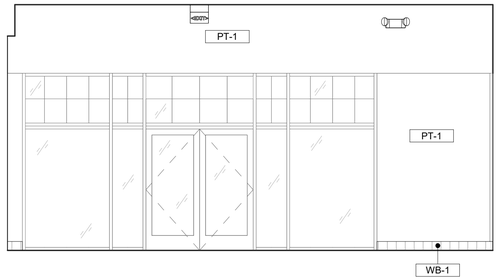

D1 DINING (STOREFRONT) - EAST
1/4" = 1'-0"

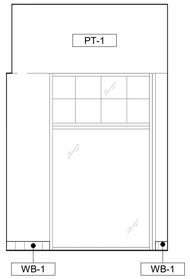

D5 DINING (SHORT WALL) - SE
1/4" = 1'-0"

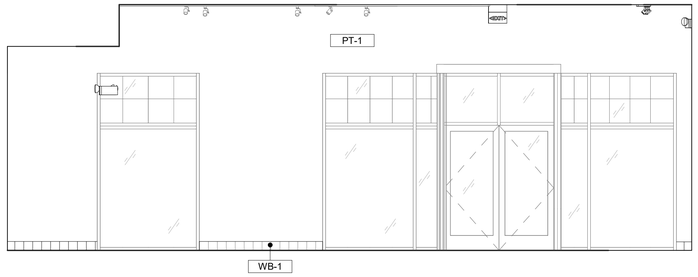

D7 DINING (STOREFRONT) - SOUTHEAST
1/4" = 1'-0"

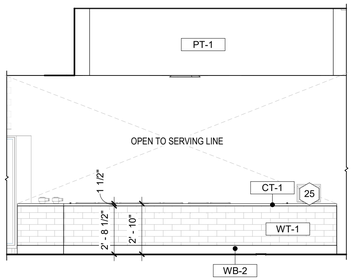

H1 DINING (BUFFET COUNTER) - NORTHWEST
1/4" = 1'-0"

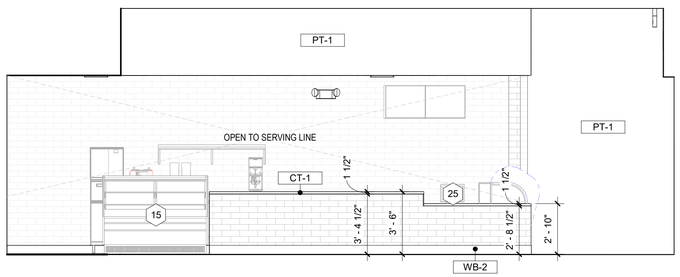

H5 DINING (DESSERTS) - NORTH
1/4" = 1'-0"

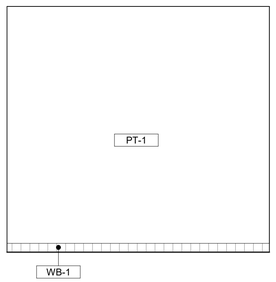

H10 DINING - SOUTHWEST
1/4" = 1'-0"

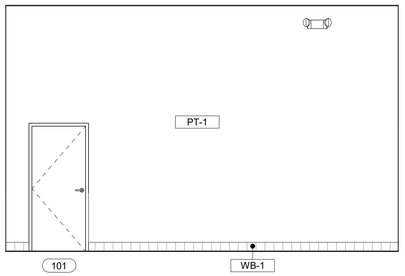

M1 DINING -WEST
1/4" = 1'-0"

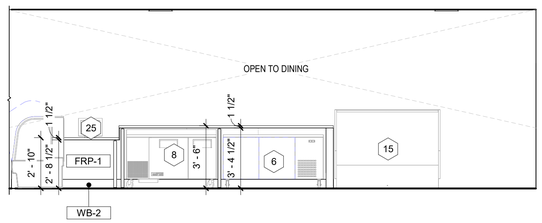

M4 SERVICE LINE (DESSERTS) - SOUTH
1/4" = 1'-0"

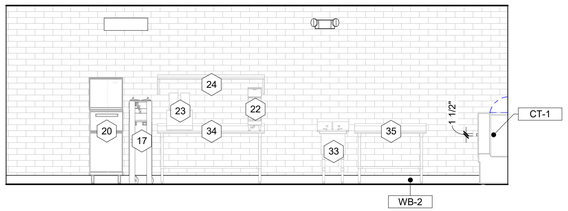

M8 SERVICE LINE (DESSERTS) - NORTH
1/4" = 1'-0"

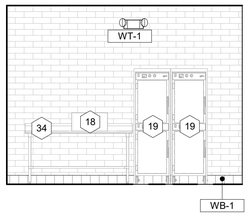

M13 SERVICE LINE (BUFFET) - NORTH
1/4" = 1'-0"

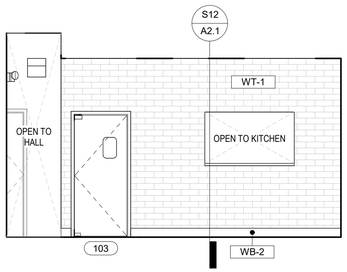

S1 SERVICE LINE (BUFFET) - WEST
1/4" = 1'-0"

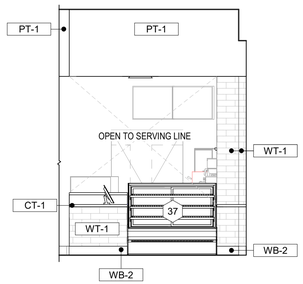

S4 SERVICE LINE (DESSERTS) - WEST
1/4" = 1'-0"

SHEET NOTES:

- ALL WOOD BLOCKING TO BE FIRE RETARDANT TREATED WOOD.
- REFER TO ELEVATIONS AND FINISHES LEGEND FOR FINISH DESIGNATIONS.
- FINISH ALL EXPOSED SURFACES OF CABINETS WITH FINISH INDICATED IN ELEVATION AND SECTION.
- PROVIDE ALL ADJUTABLE STAINLESS STEEL SUPPORT LEGS.
- CABINETRY/CASEWORK CONTRACTOR TO PROVIDE SIDE AND BACK SPLASHES AT ALL COUNTERS - PROVIDE ACCESS INTO ALL CORNER CABINETS - DO NOT CREATE ANY 'DEAD END' CABINETS.
- ALL EQUIPMENT TO BE PROVIDED BY EQUIPMENT VENDOR INSTALLED BY GC - SEE EQUIPMENT PLANS AND EQUIPMENT SCHEDULE FOR ADDITIONAL INFORMATION.
- ALL ELECTRICAL OUTLETS FOR COUNTER TOP EQUIPMENT ARE TO BE LOCATED ABOVE BACKSPLASH HEIGHT WHEN POSSIBLE. SEE ELECTRICAL DRAWINGS FOR ADDITIONAL INFORMATION.

LANDLORD NOTES:

Oculus Inc.
1 S. Memorial Dr., Suite 1500
St. Louis, MO 63102
314.367.6100
www.oculusinc.com

NINO'S Southern Sides

FOX POINT

8775 N. PORT WASHINGTON RD.
FOX POINT, WI 53217

#	Description	Date

These drawings/specifications are the property of Oculus Inc. They are furnished as contract documents only. The seal(s) and signature(s) apply only to the document to which they are affixed, and expressly disclaim any responsibility for all other plans, specifications, estimates, reports or other documents or instruments relating to or intended to be used for any part or parts of the architectural or engineering project. Additionally these drawings and seal(s) shall in no way convey or imply any type of warranty or certification relating to the performance of products and materials beyond those provided by their respective manufacturer.
© 2024 Oculus Inc.

ISSUED FOR PERMIT

Client Approval

ELEVATIONS

Project #	68423-WI01
Issue Date	12/5/2024
Scale	AS INDICATED
Drawn by	BJK
Checked by	CAP

A5.0

12/10/2024 1:58:58 PM FOX POINT

TI TEMPLATE V1.0
10-11-2011

SUMMARY

A. GENERAL AND SUPPLEMENTARY CONDITIONS WITHIN THE SPECIFICATIONS ARE HEREBY INCORPORATED AND BECOME PART OF THESE SPECIFICATIONS AND AS SUCH SHALL BE APPLICABLE TO THE WORK OF THE ELECTRICAL CONTRACT.

B. PRIOR TO SUBMISSION OF A BID PROPOSAL, THE CONTRACTOR SHALL VISIT THE SITE AND BECOME FAMILIAR WITH ALL EXISTING CONDITIONS AND LIMITATIONS THAT IMPACT THE WORK OF THIS CONTRACT. NO ADDITIONAL COSTS TO THE OWNER SHALL BE PERMITTED FOR CHANGES TO THE WORK AS A RESULT OF THE CONTRACTORS FAILURE TO VISIT THE SITE PRIOR TO BIDDING AND IDENTIFY ITEMS THAT WERE ABLE TO BE VERIFIED DURING A SITE VISIT PRIOR TO THE SUBMISSION OF A BID PROPOSAL.

C. CONTRACTOR SHALL PROVIDE ALL LABOR, MATERIAL, EQUIPMENT, RIGGING, AND MISCELLANEOUS ITEMS AS REQUIRED FOR A COMPLETE, OPERATIONAL, FUNCTIONAL AND CODE COMPLIANT ELECTRICAL INSTALLATION AS SHOWN ON THE DRAWINGS AND AS SPECIFIED IN THESE SPECIFICATIONS.

LANDLORDS REQUIREMENTS

A. ALL WORK OF THIS CONTRACT SHALL BE COMPLETED IN STRICT ACCORDANCE WITH ALL APPLICABLE LANDLORD REQUIREMENTS INCLUDING BUT NOT NECESSARILY LIMITED TO; LANDLORD'S WORK LETTER, LANDLORD'S CONSTRUCTION CRITERIA AND/OR THE TENANT/LANDLORD AGREEMENT. THIS CONTRACTOR SHALL EXAMINE THESE DOCUMENTS PRIOR TO THE SUBMISSION OF A BID PROPOSAL.

B. ALL APPLICABLE LANDLORD REQUIREMENTS INCLUDING BUT NOT NECESSARILY LIMITED TO THE LANDLORD'S WORK LETTER, LANDLORDS CONSTRUCTION CRITERIA AND/OR THE TENANT/LANDLORD AGREEMENT DOCUMENTS SHALL BE CONSIDERED PART OF THESE SPECIFICATIONS.

EXISTING CONDITIONS

A. THE CONTRACT DOCUMENTS ARE BASED ON INFORMATION PROVIDED TO THE CONSULTANT AT THE TIME OF DESIGN. THIS CONTRACTOR SHALL VERIFY ALL EXISTING CONDITIONS PRIOR TO SUBMITTING A BID PROPOSAL.

BIDS AND SUBSTITUTIONS

A. PRIOR TO SUBMISSION OF A BID PROPOSAL, CONTRACTOR SHALL THOROUGHLY REVIEW THE BID INSTRUCTIONS AND ALL CIVIL, ARCHITECTURAL, STRUCTURAL, FOOD SERVICE, AND MEPFP AND TELECOMMUNICATION CONSTRUCTION DOCUMENTS.

B. SHOULD THE CONTRACTOR WISH TO SUBMIT AN ALTERNATE PRODUCT TO THE MANUFACTURERS NAMED IN THESE SPECIFICATIONS OR ON THE DRAWINGS FOR ANY EQUIPMENT, THE CONTRACTOR SHALL SUBMIT A VOLUNTARY ALTERNATIVE A MINIMUM OF SEVEN (7) CALENDAR DAYS PRIOR TO BID, STATING THE MANUFACTURER'S NAME, MODEL NUMBER, WRITTEN, DETAILED PRODUCT DATA.

C. WORK PERFORMED OR CONSTRUCTED WITH UNAPPROVED EQUALS IS AT CONTRACTOR'S RISK AND ANY REQUIRED CORRECTION OF WORK INCORPORATING UNAPPROVED EQUALS SHALL BE AT CONTRACTOR'S SOLE COST AND EXPENSE.

QUALITY ASSURANCE

A. ALL MATERIALS AND EQUIPMENT SHALL BE NEW.

B. PROVIDE PERMITS, INSPECTIONS, FINAL CERTIFICATES OF INSPECTION BY THE AUTHORITY HAVING JURISDICTION, PERMIT AND INSPECTION FEES AND ALL MATERIALS, EQUIPMENT AND LABOR AS REQUIRED FOR A COMPLETE, FUNCTIONAL, FULLY OPERATIONAL AND CODE COMPLIANT ELECTRICAL SYSTEM.

C. THIS CONTRACTOR SHALL PROVIDE ALL MATERIALS, LABOR AND ACCESSORIES FOR A COMPLETE FUNCTIONAL AND CODE COMPLIANT ELECTRICAL INSTALLATION, WHETHER OR NOT SHOWN ON THE DRAWINGS OR SPECIFIED IN THESE SPECIFICATIONS.

D. EC SHALL VERIFY THE VOLTAGE AND AMPERAGE REQUIREMENTS OF ALL EQUIPMENT DELIVERED TO THE SITE PRIOR TO CONNECTION. EC SHALL NOTIFY THE OWNER OF ANY DIFFERENCES

E. REQUIREMENTS OF REGULATORY AGENCIES:

1. PERMITS: ARRANGE AND PAY FOR ALL PERMITS, INSPECTIONS AND UTILITY CONNECTIONS REQUIRED.
2. PROVIDE ALL TESTS AND INSPECTIONS REQUIRED BY THE AUTHORITY HAVING JURISDICTION.
3. PROVIDE A SIGNED CERTIFICATE OF INSPECTION AT THE COMPLETION OF THE PROJECT. INCLUDE IN OPERATION AND MAINTENANCE MANUALS.

F. CODES AND STANDARDS

1. COMPLY WITH SPECIFIED CODES AND STANDARDS. IF CONFLICT EXISTS BETWEEN CODES OR STANDARDS AND DRAWINGS, PROJECT MANUAL OR ADDENDA REQUIREMENTS, REQUEST CLARIFICATION FROM ARCHITECT/ENGINEER.
2. CONFORM TO THE INSTALLATION RULES AND REGULATIONS OF THE CODES AND STANDARDS LISTED INCLUDING ALL SUBSEQUENTLY PUBLISHED AMENDMENTS THERETO ISSUED PRIOR TO THE DATE OF THE BIDDING DOCUMENTS.
3. CONFORM TO THE REQUIREMENTS OF ALL LOCAL, STATE AND FEDERAL AGENCIES WHICH HAVE AUTHORITY OVER THIS PROJECT.
4. COMPLY WITH THE APPLICABLE EDITION OF THE FOLLOWING CODES AND STANDARDS THAT HAVE BEEN ADOPTED BY AND ARE ENFORCED BY THE AUTHORITY HAVING JURISDICTION:

a. INTERNATIONAL BUILDING CODE.
b. INTERNATIONAL ENERGY CONSERVATION CODE
c. INTERNATIONAL MECHANICAL CODE
d. NATIONAL ELECTRICAL CODE
e. INTERNATIONAL FIRE CODE
f. LIFE SAFETY CODE, NFPA 101
g. AMERICANS WITH DISABILITIES ACT ACCESSIBILITY GUIDELINES
h. ALL LOCAL CODES AND ORDINANCES ADOPTED AND ENFORCED BY THE AUTHORITY HAVING JURISDICTION.

G. REFERENCED STANDARDS:

1. ALL EQUIPMENT, APPARATUS, MATERIALS AND SYSTEMS SHALL BE RATED, TESTED, FABRICATED AND INSTALLED IN ACCORDANCE WITH THE APPLICABLE INDUSTRY STANDARDS.
2. ALL EQUIPMENT, APPARATUS, MATERIALS AND SYSTEMS SHALL BE LISTED AND LABELED BY A NATIONALLY RECOGNIZED TESTING LABORATORY (UL, ETL, ETC)

ELECTRICAL CONTRACT DOCUMENTS

A. THE ELECTRICAL DRAWINGS (DRAWINGS) AND THE SPECIFICATIONS SHALL TOGETHER FORM A SET OF CONTRACT DOCUMENTS FOR THE ELECTRICAL WORK. NEITHER THE DRAWINGS OR THE SPECIFICATIONS SHALL BE COMPLETE WITHOUT THE OTHER. ANY ITEM SHOWN ONLY ON THE DRAWINGS OR SPECIFIED ONLY IN THE SPECIFICATIONS SHALL BE CONSIDERED AS IF SHOWN AND SPECIFIED IN BOTH.

B. ELECTRICAL DRAWINGS AND SPECIFICATIONS: COMPLY WITH THE FOLLOWING REQUIREMENTS:

1. CONTRACTOR SHALL FAMILIARIZE THEMSELVES WITH ALL DRAWINGS AND SPECIFICATIONS WITHIN THE CONTRACT DOCUMENTS, INCLUDING, BUT NOT NECESSARILY LIMITED TO, GEOTECHNICAL, LANDSCAPE, CIVIL, ARCHITECTURAL, STRUCTURAL, FOOD SERVICE, MECHANICAL, PLUMBING, TELECOMMUNICATION AND FIRE PROTECTION DRAWINGS AND SPECIFICATIONS.
2. THE ELECTRICAL DRAWINGS ARE DIAGRAMMATIC IN NATURE AND ARE INTENDED TO INDICATE APPROXIMATE LOCATION ONLY OF ELECTRICAL WORK. THE ACTUAL LOCATION OF ANY ELECTRICAL WORK SHALL NOT INTERFERE WITH THE LOCATION, CLEARANCES, ETC. REQUIRED BY THE WORK OF OTHER TRADES.
3. PRIOR TO ROUGH-IN, CONTRACTOR SHALL COORDINATE ALL DEVICE LOCATIONS WITH THE ARCHITECTURAL WALL ELEVATIONS, CASEWORK/CABINETRY ELEVATIONS AND DETAILS AND THE FINAL, APPROVED FOOD SERVICE SHOP DRAWINGS.

C. DEFINITIONS: THE FOLLOWING TERMS ARE USED ON THE ELECTRICAL DRAWINGS AND IN THE SPECIFICATIONS AND SHALL BE DEFINED AS FOLLOWS:

1. CONTRACTOR - THE ELECTRICAL CONTRACTOR OR ANY OF THEIR SUB-CONTRACTORS.
2. WORK - ALL MATERIAL, LABOR, TRANSPORTATION OF THE ELECTRICAL CONTRACTOR OR ANY OF THEIR SUB-CONTRACTORS.
3. FURNISH - PURCHASE, SUBMIT FOR REVIEW AND APPROVAL, COORDINATE WITH THE CONTRACT DOCUMENTS AND DELIVER TO THE PROJECT SITE IN NEW, UNDAMAGED CONDITION, STORE AS DIRECTED, PROTECT FROM DAMAGE DURING STORAGE.
4. INSTALL - INSTALL IN PLACE, MAKE READY FOR CONNECTION TO THE REQUIRED SERVICE.
5. CONNECT - CONNECT TO THE REQUIRED SERVICE AS REQUIRED FOR PROPER OPERATION, TEST FOR PROPER OPERATION AND FUNCTIONALITY IN ACCORDANCE WITH MANUFACTURER'S REQUIREMENTS AND REQUIREMENTS SPECIFIED WITHIN THESE SPECIFICATIONS AND TURN OVER TO THE OWNER IN FULL OPERATING CONDITION.
6. PROVIDE - FURNISH, INSTALL AND CONNECT AS DEFINED HEREIN FOR A COMPLETE, FUNCTIONAL AND CODE COMPLIANT INSTALLATION READY FOR INTENDED USE.
7. FINISHED SPACE - SPACES HAVING WALLS PAINTED OR FINISHED WITH WALL COVERING, LAY-IN OR DRYWALL CEILINGS, AND FINISHED FLOORING MATERIALS. EXAMPLES OF FINISHED SPACES INCLUDE, BUT ARE NOT NECESSARILY LIMITED TO, ALL SPACES IN A DWELLING UNIT, OFFICES, LOBBIES, CORRIDORS, TOILET ROOMS, ETC.
8. UNFINISHED SPACES - SPACES WITH UNFINISHED WALLS AND FLOORS AND TYPICALLY ARE NOT EQUIPPED WITH A CEILING. EXAMPLES INCLUDE, BUT ARE NOT NECESSARILY LIMITED TO, MECHANICAL ROOMS, ELECTRICAL ROOMS, SERVICE AREAS, ETC.
9. SHALL - ACTION THAT IS REQUIRED WITHOUT OPTION OR QUALIFICATION.
10. REMOVE - DETACH ITEMS FROM EXISTING CONSTRUCTION AND LEGALLY DISPOSE OF THEM OFF SITE UNLESS INDICATED TO BE REMOVED AND SALVAGED OR REMOVED AND RE-INSTALLED.
11. REMOVE AND SALVAGE - CAREFULLY DETACH FROM EXISTING CONSTRUCTION IN A MANNER TO PREVENT DAMAGE AND DELIVER TO OWNER READY FOR RE-USE.
12. REMOVE AND REINSTALL - DETACH ITEMS FROM EXISTING CONSTRUCTION, PREPARE FOR RE-USE, RE-INSTALL AND RECONNECT WHERE INDICATED SUCH THAT THE RE-INSTALLED ITEM IS FULLY OPERATIONAL.
13. EXISTING TO REMAIN - EXISTING ITEMS OF CONSTRUCTION THAT ARE NOT TO BE PERMANENTLY REMOVED AND THAT ARE NOT OTHERWISE INDICATED TO BE REMOVED, REMOVED AND SALVAGED OR REMOVED AND RE-INSTALLED.

SUBMITTALS

A. REVIEW OF THE SHOP DRAWINGS IS RENDERED AS A SERVICE ONLY AND SHALL NOT BE CONSIDERED AS A GUARANTEE OF MEASUREMENTS OR OF BUILDING CONDITIONS; NOR SHALL IT BE CONSTRUED AS RELIEVING THE CONTRACTOR'S OF BASIC RESPONSIBILITIES UNDER HIS CONTRACT. ARCHITECT/ENGINEER WILL REVIEW SHOP DRAWINGS ONLY FOR CONFORMANCE WITH DESIGN CONCEPT OF THE PROJECT. REVIEW BY THE ARCHITECT/ENGINEER SHALL NOT BE CONSTRUED:

1. AS PERMITTING ANY DEPARTURE FROM THE CONTRACT REQUIREMENTS.
2. AS RELIEVING THE CONTRACTOR OF THE RESPONSIBILITY FOR ANY ERROR IN DETAILS, DIMENSIONS OR OTHERWISE THAT MAY EXIST.
3. AS APPROVED DEPARTURES FROM ADDITIONAL DETAILS OR INSTRUCTIONS PREVIOUSLY FURNISHED BY THE ARCHITECT/ENGINEER.

B. SHOP DRAWINGS:

1. THE CONTRACTOR SHALL SUBMIT SHOP DRAWINGS AND DESCRIPTIVE LITERATURE OF EQUIPMENT TO BE FURNISHED UNDER THIS CONTRACT. DRAWINGS SHALL STATE CAPACITIES, SIZES, ETC., OF ALL EQUIPMENT AND SHALL BE CERTIFIED. SEE GENERAL CONDITIONS AND SUPPLEMENTARY CONDITIONS FOR ADDITIONAL REQUIREMENTS.
2. PROVIDE SUBMITTALS FOR LIGHTING FIXTURES, TRANSFORMERS, PANELBOARDS, LIGHTING CONTROL DEVICES, CONTACTORS, WIRING DEVICES, DISCONNECT SWITCHES, POWER SYSTEM STUDY.

C. THE CONTRACTOR SHALL PERFORM NO PORTION OF THE WORK REQUIRING SUBMITTAL AND REVIEW OF SHOP DRAWINGS, PRODUCT DATA, SAMPLES OR SIMILAR SUBMITTALS UNTIL THE RESPECTIVE SUBMITTALS HAS BEEN APPROVED BY THE ENGINEER.

ELECTRICAL COORDINATION DRAWINGS

A. PREPARE ELECTRICAL COORDINATION DRAWINGS AS REQUIRED BY THE WORK AND AS DIRECTED BY THE GENERAL CONTRACTOR.

B. MEET WITH REPRESENTATIVES OF THE OTHER DISCIPLINES/TRADES TO COORDINATE THE ELECTRICAL WORK WITH THE WORK OF EACH DISCIPLINE AND TO OBTAIN INFORMATION REGARDING THEIR WORK THAT IS TO BE INDICATED ON THE COORDINATION DRAWINGS.

POWER SYSTEM STUDIES - GENERAL

A. PROVIDE COMPUTER-BASED, POWER SYSTEM STUDIES THAT INCLUDES:

1. A SHORT CIRCUIT STUDY TO DETERMINE THE MINIMUM INTERRUPTING CAPACITY OF CIRCUIT PROTECTIVE DEVICES;
2. AN ARC-FLASH STUDY TO DETERMINE THE ARC-FLASH HAZARD DISTANCE AND THE INCIDENT ENERGY TO WHICH PERSONNEL COULD BE EXPOSED DURING WORK ON OR NEAR ELECTRICAL EQUIPMENT.

B. STUDIES SHALL BE PERFORMED UTILIZING COMPUTER PROGRAMS THAT ARE DISTRIBUTED NATIONALLY AND ARE IN WIDE USE. SOFTWARE ALGORITHMS SHALL COMPLY WITH REQUIREMENTS OF STANDARDS AND GUIDES SPECIFIED IN THIS SECTION. MANUAL CALCULATIONS ARE UNACCEPTABLE.

C. SOFTWARE DEVELOPERS: SUBJECT TO COMPLIANCE WITH SPECIFIED REQUIREMENTS, PERFORM STUDIES UTILIZING SOFTWARE PRODUCTS BY ONE OF THE FOLLOWING:

1. EASY POWER
2. POWER ANALYTICS CORPORATION
3. SKM SYSTEMS ANALYSIS

D. ALL STUDIES SHALL BE BASED ON THE DEVICE CHARACTERISTICS OF ACTUAL EXISTING COMPONENTS AND THE NEW COMPONENTS BEING INSTALLED.

E. PROVIDE ALL FIELD LABOR AS REQUIRED TO OBTAIN ALL DATA NECESSARY TO CONDUCT THE STUDIES SPECIFIED HEREIN.

F. SUBMIT STUDIES FOR REVIEW BEFORE SUBMITTING THE SYSTEM OVERCURRENT PROTECTIVE DEVICE AND POWER DISTRIBUTION EQUIPMENT SUBMITTALS. SUBMIT STUDY REPORT FOR REVIEW PRIOR TO RECEIVING FINAL APPROVAL OF THE OVERCURRENT PROTECTIVE DEVICE AND DISTRIBUTION EQUIPMENT SUBMITTALS.

G. WHERE FORMAL COMPLETION OF STUDIES WILL CAUSE A DELAY IN THE ORDERING AND MANUFACTURING OF OVERCURRENT PROTECTIVE DEVICES AND POWER DISTRIBUTION EQUIPMENT, OBTAIN APPROVAL FROM ENGINEER FOR PRELIMINARY SUBMITTAL OF SUFFICIENT STUDY DATA TO ENSURE THAT THE SELECTION OF DEVICES AND ASSOCIATED CHARACTERISTICS IS SATISFACTORY AND IN COMPLIANCE WITH THE RESULTS OF THE STUDIES BEING PERFORMED.

SHORT CIRCUIT STUDY

A. PROVIDE A COMPUTER-BASED, SHORT CIRCUIT STUDY TO DETERMINE THE MINIMUM INTERRUPTING CAPACITY OF CIRCUIT PROTECTIVE DEVICES.

B. FOR NEW EQUIPMENT, USE CHARACTERISTICS SUBMITTED UNDER THE PROVISIONS OF ACTION SUBMITTALS AND INFORMATION SUBMITTALS FOR THIS PROJECT.

C. FOR EXISTING RELOCATED EQUIPMENT AND EXISTING EQUIPMENT THAT IS EXISTING TO REMAIN, OBTAIN REQUIRED ELECTRICAL DISTRIBUTION SYSTEM DATA BY FIELD INVESTIGATION AND SURVEYS, CONDUCTED BY QUALIFIED TECHNICIANS AND ENGINEERS. THE QUALIFICATIONS OF TECHNICIANS AND ENGINEERS SHALL BE QUALIFIED AS DEFINED BY NFPA 70E.

D. GATHER AND TABULATE ALL REQUIRED DATA TO SUPPORT THE SHORT-CIRCUIT STUDY. COMPLY WITH RECOMMENDATIONS IN IEEE 551 AS TO THE AMOUNT OF DETAIL THAT IS REQUIRED TO BE ACQUIRED IN THE FIELD.

E. BEGIN SHORT-CIRCUIT CURRENT ANALYSIS AT THE SERVICE, EXTENDING DOWN TO THE SYSTEM OVERCURRENT PROTECTIVE DEVICES AS FOLLOWS:

1. TO NORMAL SYSTEM LOW-VOLTAGE LOAD BUSES WHERE FAULT CURRENT IS 10 KA OR LESS.

ARC FLASH HAZARD STUDY

A. PROVIDE A COMPUTER-BASED, ARC-FLASH HAZARD STUDY TO DETERMINE THE ARC-FLASH HAZARD DISTANCE AND THE INCIDENT ENERGY TO WHICH PERSONNEL COULD BE EXPOSED DURING WORK ON OR NEAR EXISTING AND NEW ELECTRICAL EQUIPMENT.

B. ELECTRICAL SURVEY DATA: GATHER AND TABULATE ALL REQUIRED INPUT DATA TO SUPPORT STUDY. COMPLY WITH RECOMMENDATIONS IN IEEE 1584 AND NFPA 70E AS TO THE AMOUNT OF DETAIL THAT IS REQUIRED TO BE ACQUIRED IN THE FIELD.

C. FOR NEW EQUIPMENT, USE CHARACTERISTICS SUBMITTED UNDER THE PROVISIONS OF ACTION SUBMITTALS AND INFORMATION SUBMITTALS FOR THIS PROJECT.

D. FOR EXISTING EQUIPMENT, WHETHER OR NOT RELOCATED, OBTAIN REQUIRED ELECTRICAL DISTRIBUTION SYSTEM DATA BY FIELD INVESTIGATION AND SURVEYS, CONDUCTED BY QUALIFIED TECHNICIANS AND ENGINEERS.

E. HAZARD LABELS SHALL HAVE AN ORANGE HEADER WITH THE WORDING, "WARNING, ARC-FLASH HAZARD," AND SHALL INCLUDE THE FOLLOWING INFORMATION TAKEN DIRECTLY FROM THE ARC-FLASH HAZARD ANALYSIS:

1. LOCATION DESIGNATION.
2. NOMINAL VOLTAGE.
3. FLASH PROTECTION BOUNDARY.
4. HAZARD RISK CATEGORY.
5. INCIDENT ENERGY.
6. WORKING DISTANCE.
7. ENGINEERING REPORT NUMBER, REVISION NUMBER, AND ISSUE DATE.

F. ARC FLASH HAZARD WARNING LABELS SHALL BE A 3.5-BY-5-INCH THERMAL TRANSFER LABEL OF HIGH-ADHESION POLYESTER FOR EACH WORK LOCATION INCLUDED IN THE ANALYSIS.

G. LABELS SHALL BE MACHINE PRINTED, WITH NO FIELD-APPLIED MARKINGS.

RECORD DOCUMENTS

A. DURING THE PROGRESS OF THE WORK, CONTRACTOR SHALL MAINTAIN A CURRENT (DAILY) AS-BUILT SET OF THE DRAWINGS AND SPECIFICATIONS, INDICATING THEREON ALL WORK INSTALLED AT VARIANCE WITH SUCH CONTRACT DOCUMENTS INCLUDING, WITHOUT LIMITATION, WORK COVERED BY ADDENDA, FIELD WORK ORDERS, CHANGE ORDERS, AND ENGINEERS

B. CONTRACTOR SHALL PROVIDE THE TENANT WITH THE FINAL AS-BUILT SET OF DRAWINGS AT THE COMPLETION OF THE WORK.

COORDINATION WITH LANDLORD

A. PRIOR TO COMMENCEMENT OF WORK, CONTRACTOR SHALL COORDINATE THE WORK OF THIS CONTRACT WITH THE LANDLORD'S AUTHORIZED REPRESENTATIVE.

B. CONTRACTOR SHALL MEET WITH AUTHORIZED REPRESENTATIVES OF THE LANDLORD AND EACH UTILITY TO DISCUSS LANDLORD SCOPE OF WORK, CONTRACTOR SCOPE OF WORK, POINT OF SERVICE PICK-UP, DETAILS REGARDING SYSTEM INTERFACE STANDARDS TO BE COMPLIED WITH, ETC.

COORDINATION WITH OTHER TRADES

A. ELECTRICAL WORK SHALL BE INSTALLED SO AS TO NOT CONFLICT WITH THE WORK OF OTHER TRADES.

B. SET ALL SLEEVES AND CUT AND PATCH ALL MISCELLANEOUS HOLES NECESSARY FOR THE CONVENIENT AND PROPER INSTALLATION OF THE WORK.

C. CONFER WITH THE OTHER CONTRACTORS REGARDING THE LOCATION AND SIZE OF PIPES, EQUIPMENT, DUCTS, OPENINGS AND SPECIAL ARCHITECTURAL TREATMENTS IN ORDER THAT THERE MAY BE NO INTERFERENCES BETWEEN THE INSTALLATION OR THE PROGRESS OF THE WORK OF ANY CONTRACTOR ON THE PROJECT.

D. ALL LINE VOLTAGE WIRING AND FINAL CONNECTIONS TO COMPLETE MECHANICAL SYSTEMS SHALL BE PROVIDED BY THE ELECTRICAL CONTRACTOR.

E. PROVIDE FINAL ELECTRICAL CONNECTIONS TO EQUIPMENT FURNISHED/PROVIDED BY OTHERS, (HVAC EQUIPMENT, PLUMBING EQUIPMENT, COMMERCIAL KITCHEN EQUIPMENT, ETC.

F. COORDINATE THE NEMA CONFIGURATION OF THE RECEPTACLE TO BE PROVIDED WITH THE NEMA PLUG CONFIGURATION OF THE CORD/PLUG ASSEMBLY FURNISHED WITH THE EQUIPMENT TO BE INSTALLED. PROVIDE RECEPTACLES HAVING A NEMA CONFIGURATION THAT MATCHES THE NEMA CONFIGURATION OF THE PLUG ON THE EQUIPMENT.

G. PROVIDE FINAL COORDINATION OF AVAILABLE POWER (VOLTAGE/PHASE) WITH OTHER TRADES PRIOR TO THEIR ORDERING OF EQUIPMENT.

H. REFER TO MECHANICAL DRAWINGS FOR ADDITIONAL INFORMATION REGARDING ELECTRICAL WORK TO BE PROVIDED ASSOCIATED WITH MECHANICAL EQUIPMENT.

I. WHERE ELECTRICAL WORK (CONDUIT BOXES, RECEPTACLES, DISCONNECT SWITCHES, ETC.) ARE SECURED DIRECTLY TO THE HOUSING OF MECHANICAL EQUIPMENT, THEY SHALL BE INSTALLED ON A PORTION OF THE EQUIPMENT HOUSING NOT REQUIRED TO BE REMOVED FOR ROUTINE MAINTENANCE. PRIOR TO INSTALLATION, COORDINATE ALL ELECTRICAL WORK AT MECHANICAL EQUIPMENT WITH MECHANICAL CONTRACTOR.

TEMPORARY POWER

A. THE CONTRACTOR SHALL PROVIDE ALL REQUIRED TEMPORARY CONSTRUCTION POWER AND LIGHTING TO ALLOW ALL CONTRACTORS AND SUB-CONTRACTORS TO PERFORM THE WORK OF THEIR CONTRACTS.

B. PRIOR TO THE SUBMISSION OF A BID PROPOSAL, THE CONTRACTOR SHALL CONTACT THE GENERAL CONTRACTOR TO COORDINATE THE TYPE OF EQUIPMENT TO BE UTILIZED DURING THE WORK OF THIS CONTRACT

SEQUENCING AND SCHEDULING

A. COORDINATE ELECTRICAL EQUIPMENT INSTALLATION WITH OTHER BUILDING COMPONENTS AND THE PROJECT PHASING PLAN.

FIRE STOPPING

A. PROVIDE FIRE STOPPING FOR PENETRATIONS BY CONDUIT OR CABLES AND OTHER EQUIPMENT THROUGH FIRE-RATED VERTICAL BARRIERS (WALLS AND PARTITIONS), HORIZONTAL BARRIERS (FLOOR/CEILING ASSEMBLIES) AND VERTICAL SHAFT WALLS AND PARTITIONS.

B. FIRESTOP SYSTEM INSTALLATION SHALL COMPLY WITH THE REQUIREMENTS OF ATME E 814 OR UL 1479 TESTED ASSEMBLIES THAT PROVIDE A FIRE RATING EQUAL TO OR GREATER THAN THAT OF THE CONSTRUCTION BEING PENETRATED.

SEISMIC RESTRAINT

A. PROVIDE SEISMIC RESTRAINT FOR ELECTRICAL WORK AND SYSTEMS AND EQUIPMENT IN STRICT ACCORDANCE WITH THE APPLICABLE BUILDING CODE AND THE REQUIREMENTS OF THE AUTHORITY HAVING JURISDICTION.

B. SUBMIT ALL REQUIRED DETAILS TO THE AUTHORITY HAVING JURISDICTION FOR REVIEW AND APPROVAL.

CUTTING & PATCHING

A. PRIOR TO CORE DRILLING OR SAW CUTTING OPERATIONS, CONTRACTOR SHALL X-RAY OR GROUND PENETRATING RADAR (GPR) THE EXISTING SLAB TO DETERMINE THE LOCATION OF ANY EXISTING UTILITIES, STRUCTURAL MEMBERS. ETC. COORDINATE ALL SCANNING, CUTTING AND CORE DRILLING OPERATIONS WITH GC AND LANDLORD PRIOR TO COMMENCEMENT OF WORK.

B. CORE-DRILL OR SAW-CUT EXISTING FLOORS, WALLS, ROOF, ETC., AS REQUIRED FOR THE INSTALLATION OF THE ELECTRICAL WORK. EXISTING UTILITIES AND STRUCTURAL COMPONENTS, INCLUDING BUT NOT NECESSARILY LIMITED TO, COLUMNS, BEAMS, GIRDERS, PLATES OR JOISTS SHALL NOT BE CUT.

C. PATCH SURROUNDING AREAS FLUSH WITH ADJACENT SURFACES AND PREPARE TO RECEIVE SPECIFIED FINISHES.

D. PATCH AND REPAIR ROOF TO MATCH EXISTING ROOFING SYSTEM. ALL ROOF WORK SHALL BE PERFORMED TO MEET THE WARRANTY REQUIREMENTS OF THE EXISTING ROOFING SYSTEM.

GROUNDING

A. PROVIDE ELECTRICAL SYSTEM AND EQUIPMENT GROUNDING IN ACCORDANCE WITH APPLICABLE N.E.C. REQUIREMENTS.

B. THE METALLIC CONDUIT SYSTEM SHALL BE GROUNDED AND BONDED TO FORM AN EQUIPMENT GROUNDING CONDUCTOR.

C. PROVIDE AN INSULATED EQUIPMENT GROUND CONDUCTOR WITHIN ALL FEEDERS AND BRANCH CIRCUITS. THIS EQUIPMENT GROUND CONDUCTOR SHALL BE IN ADDITION TO THE EQUIPMENT GROUND CONDUCTOR FORMED BY THE METALLIC CONDUIT SYSTEM.

D. PROVIDE A #6 AWG GREEN INSULATED GROUNDING CONDUCTOR FROM THE GROUND BAR AT TELEPHONE TERMINAL BOARD TO THE ELECTRICAL SERVICE GROUND.

E. PROVIDE A COPPER GROUNDING BAR AT THE TELEPHONE TERMINAL BACKBOARD. GROUNDING BAR SHALL BE ¼ INCH X 4 INCHES X 12 INCHES, PRE-DRILLED FOR CONDUCTOR TERMINATIONS, WITH NON-METALLIC STAND-OFF BRACKETS WITH INSULATORS. CHATSWORTH PRODUCTS 10622-012 OR APPROVED EQUAL.

EQUIPMENT IDENTIFICATION

A. PROVIDE EQUIPMENT LABELS ON PANELBOARDS, DISCONNECT SWITCHES, CONTACTORS, CONTROLS, ETC. EQUIPMENT LABELS SHALL BE ENGRAVED PHENOLIC RESIN NAMEPLATES ATTACHED TO ENCLOSURE WITH MECHANICAL FASTENERS. SELF-ADHESIVE NAMEPLATES ARE NOT ACCEPTABLE. LETTERING SHALL BE 1/2" HIGH, BLACK TEXT ON WHITE BACKGROUND.

B. ENGRAVED NAMEPLATES ATTACHED TO COMPONENTS SHALL IDENTIFY THE EQUIPMENT DESIGNATION, NAME OF THE "UPSTREAM" POWER SOURCE (AS APPLICABLE), VOLTAGE AND PHASE.

C. THE COVERS OF ALL OUTLET AND JUNCTION BOXES INSTALLED ABOVE CEILINGS AND INSTALLED EXPOSED IN UNFINISHED SPACES SHALL BE LABELED TO IDENTIFY THE SERVING PANEL, VOLTAGE, PHASE AND CIRCUIT NUMBERS CONTAINED WITHIN THE BOX. LABEL SHALL BE LEGIBLY HANDWRITTEN WITH BLACK, FELT TIP PERMANENT MARKER.

D. THE COVER PLATES OF ALL WIRING DEVICES SHALL BE LABELED TO IDENTIFY THE SERVING PANEL AND THE CIRCUITS SERVING THE DEVICE. LABELS SHALL BE MACHINE PRINTED, BLACK TEXT ON A CLEAR, SELF ADHESIVE LABEL.

CONDUIT AND FITTINGS

A. ALL INTERIOR AND EXTERIOR CONDUITS SHALL BE INSTALLED AND SUPPORTED IN ACCORDANCE WITH N.E.C. REQUIREMENTS.

B. MINIMUM CONDUIT SIZE SHALL BE ¾" TRADE SIZE. SWITCH LEGS SHALL BE ½" TRADE SIZE.

C. WITHIN INTERIOR FINISHED SPACES, ALL CONDUIT SHALL BE INSTALLED CONCEALED WITHIN NEW AND EXISTING WALLS AND ABOVE NEW AND EXISTING CEILINGS.

D. CONDUIT INSTALLED WITHIN THE INTERIOR OF THE BUILDING SHALL BE GALVANIZED ELECTRICAL METALLIC TUBING (EMT). CONDUIT FITTINGS FOR INDOOR EMT CONDUITS SHALL BE CAST METAL, COMPRESSION TYPE.

E. EMT SHALL BE USED FOR INTERIOR FEEDERS AND BRANCH CIRCUITS INSTALLED EXPOSED IN UNFINISHED SPACES, CONCEALED ABOVE NEW OR EXISTING CEILINGS OR CONCEALED WITHIN EXISTING AND NEW INTERIOR PARTITIONS.

F. CONDUITS INSTALLED EXPOSED ON THE EXTERIOR OF THE BUILDING SHALL BE GALVANIZED RIGID STEEL. FITTINGS SHALL BE THREADED TYPE.

G. CONDUITS INSTALLED UNDER SLAB ON GRADE CONSTRUCTION SHALL BE RIGID NON-METALLIC (RNC), SCHEDULE 40 PVC. RNC COMPLYING WITH NEMA TC 2 AND UL 651 UNLESS OTHERWISE INDICATED. FITTINGS FOR RIGID NON-METALLIC CONDUIT SHALL COMPLY WITH NEMA TC 3; MATCH TO CONDUIT TYPE AND MATERIAL.

H. PROVIDE CONDUIT EXPANSION FITTINGS IN ALL CONDUIT RUNS THAT EXTEND ACROSS BUILDING EXPANSION JOINTS AND WHERE MOVEMENT MAY BE ENCOUNTERED.

I. CONDUIT SHALL BE SUPPORTED FROM STRUCTURE ONLY.

J. PVC CONDUIT SHALL ONLY BE USED BELOW GRADE.

K. PROVIDE FLEXIBLE METAL CONDUIT FOR CONNECTIONS TO VIBRATING EQUIPMENT WITHIN INTERIOR DRY LOCATIONS. MAXIMUM CONDUIT LENGTH SHALL BE 36 INCHES.

L. PROVIDE LIQUID-TIGHT FLEXIBLE METAL CONDUIT FOR CONNECTIONS TO VIBRATING EQUIPMENT IN WET OR OUTDOOR LOCATIONS. MAXIMUM CONDUIT LENGTH SHALL BE 36 INCHES.

M. PROVIDE FLEXIBLE METAL CONDUIT FOR FINAL CONNECTIONS TO RECESSED LIGHT FIXTURES (FIXTURE WHIPS). MAXIMUM CONDUIT LENGTH SHALL BE 72 INCHES.

N. CONDUITS THAT EXTEND UP TO THE ROOF LEVEL TO SERVE ROOF MOUNTED MECHANICAL EQUIPMENT INSTALLED ON A CURB SHALL BE ROUTED WITHIN THE EQUIPMENT CURB. COORDINATE ELECTRICAL WORK WITH MECHANICAL EQUIPMENT INSTALLER.

O. ACCEPTABLE MANUFACTURERS FOR GALVANIZED RIGID CONDUIT, EMT, FLEXIBLE METAL CONDUITS AND LIQUID-TIGHT FLEXIBLE METAL CONDUITS SHALL BE ALLIED, REPUBLIC, WHEATLAND, ELECTRI-FLEX AND ANACONDA.

P. ACCEPTABLE MANUFACTURERS FOR CONDUIT FITTINGS SHALL BE THOMAS AND BETTS OR APPROVED EQUAL.

CONDUCTORS

A. ALL CONDUCTORS SHALL BE SOFT DRAWN, ANNEALED COPPER, #12 AWG MINIMUM.

B. CONDUCTORS #12 AND #10 AWG SHALL BE SOLID; #8 AWG AND LARGER SHALL BE STRANDED.

C. THE USE OF ALUMINUM CONDUCTORS IS NOT ACCEPTABLE.

D. EXPOSED, INTERIOR FEEDERS: TYPE THHN-THWN, SINGLE CONDUCTORS IN CONDUIT.

E. FEEDERS INSTALLED CONCEALED IN CEILINGS, WALLS, PARTITIONS: TYPE THHN-THWN, SINGLE CONDUCTORS IN CONDUIT.

F. FEEDERS INSTALLED CONCEALED IN CONCRETE, BELOW SLABS-ON-GRADE AND UNDERGROUND: TYPE THHN-THWN, SINGLE CONDUCTORS IN PVC CONDUIT.

G. EXPOSED, INTERIOR, BRANCH CIRCUITS: TYPE THHN-THWN, SINGLE CONDUCTORS IN CONDUIT.

H. BRANCH CIRCUITS CONCEALED IN EXISTING AND NEW CEILINGS, WALLS, AND PARTITIONS: TYPE THHN-THWN, SINGLE CONDUCTORS IN CONDUIT.

I. BRANCH CIRCUITS CONCEALED BELOW SLABS-ON-GRADE, AND UNDERGROUND: TYPE THHN-THWN, SINGLE CONDUCTORS IN CONDUIT.

J. ACCEPTABLE MANUFACTURERS FOR CONDUCTORS: GENERAL CABLE COMPANY, CAROL, ANACONDA, ROME, SOUTHWIRE.

K. CLASS 1 CONTROL CIRCUITS: TYPE THHN-THWN, IN CONDUIT.

L. CLASS 2 CONTROL CIRCUITS: POWER-LIMITED PLENUM RATED CABLE, CONCEALED IN BUILDING FINISHES.

M. THE USE OF NON-METALLIC-SHEATHED CABLE (TYPE NM) AND ARMORED CABLE (TYPE AC OR BX) IS NOT ACCEPTABLE

N. WIRE CONNECTORS SHALL BE EQUAL TO SCOTCH LOCK FOR #8 AWG AND SMALLER, THOMAS AND BETTS LOCK-TITE FOR #6 AND LARGER.

O. PROVIDE #10 AWG CONDUCTORS FOR BRANCH CIRCUITS HAVING A CONDUCTOR LENGTH LONGER THAN 75 FEET.

P. SIZE OF CONDUCTORS AND CABLES INDICATED OR SPECIFIED ARE IN AMERICAN WIRE GAGE (AWG - BROWN AND SHARPE).

Q. INSTALL ALL WIRING IN APPROVED RACEWAY AND ENCLOSURES, EXCEPT WHERE SPECIFIED OR INDICATED, FOR LOW-VOLTAGE WIRING OR, WHERE TYPE MC CABLE IS INDICATED, SPECIFIED AS ACCEPTABLE, OR BOTH.

R. SUPPORT ALL CONDUCTORS AND CABLES IN VERTICAL INSTALLATIONS, AS REQUIRED BY NFPA-70, BY INSTALLING CABLE SUPPORTS OR PLUG-TYPE CONDUIT RISER SUPPORTS, OR WIRE-MESH SAFETY GRIPS.

S. INSTALL ALL CONDUCTORS AND CABLE IN RACEWAYS CONTINUOUS WITHOUT TAPS OR SPLICES. SPLICE OR TAP ONLY IN APPROVED BOXES AND ENCLOSURES WITH APPROVED SOLDERLESS CONNECTORS, OR CRIMP CONNECTORS AND TERMINAL BLOCKS FOR CONTROL WIRING, AND KEEP TO THE MINIMUM REQUIRED. INSULATE ALL SPLICES, TAPS, AND JOINTS AS REQUIRED BY CODE.

T. ALL MATERIALS USED TO TERMINATE, SPLICE OR TAP CONDUCTORS: DESIGNED, PROPERLY SIZED, AND UL LISTED FOR THE SPECIFIC APPLICATION AND CONDUCTORS INVOLVED, AND INSTALLED IN STRICT ACCORDANCE WITH THE MANUFACTURER'S RECOMMENDATIONS, USING THE MANUFACTURER'S RECOMMENDED TOOLS.

U. WHERE WIRING IS INDICATED AS INSTALLED, BUT THE CONNECTION IS INDICATED "FUTURE" OR "BY OTHER DIVISION, TRADES, OR CONTRACTS", LEAVE A MINIMUM OF 3' FOOT "PIGTAIL" AT THE BOX, TAPE THE ENDS OF CONDUCTORS, AND COVER THE BOX.

V. VOLTAGE DROP IN BRANCH CIRCUITS SHALL NOT EXCEED 3 PERCENT.

W. WHEN NEW CONDUCTORS ARE CONNECTED TO EXISTING CONDUCTORS, THE NEW CONDUCTORS SHALL BE OF THE SAME AWG, CONDUCTOR MATERIAL, INSULATION TYPE TEMPERATURE RATING,. ETC. AS THE EXISTING CONDUCTORS TO WHICH BEING CONNECTED.

TYPE MC CABLE

A. A.TYPE MC CABLE: 600V, UNJACKETED: ANSI E119 AND E814, UL STANDARDS 44 OR 83 (AS APPLICABLE), AND 1569, NFPA 70 ARTICLE 330; ALUMINUM OR GALVANIZED STEEL INTERLOCKED ARMOR; THHM- OR XHHW-INSULATED CONDUCTORS; COLOR CODE: ICEA METHOD 1, WITH GREEN INSULATED GROUNDING CONDUCTOR.

B. USES PERMITTED

B.1. IN LIEU OF FLEXIBLE CONDUIT AND WIRING FROM LIGHT FIXTURES IN ACCESSIBLE CEILINGS TO JUNCTION BOXES (ATTACHED TO BUILDING STRUCTURE) ABOVE THE CEILING. PROVIDE CABLE WHIPS OF SUFFICIENT LENGTHS TO ALLOW FOR RELOCATING EACH LIGHT FIXTURE WITHIN A 5' FOOT RADIUS OF ITS INSTALLED LOCATION, BUT NOT EXCEEDING 6' FEET IN UNSUPPORTED LENGTHS.

B.2. FOR VERTICAL DROPS IN STUD WALLS.

C. USES NOT PERMITTED:

C.1. HOMERUNS TO PANELBOARDS.
C.2. WHERE EXPOSED TO VIEW.
C.3. WHERE EXPOSED TO DAMAGE.
C.4. HAZARDOUS LOCATIONS.
C.5. WET LOCATIONS
C.6. INSTALLED HORIZONTALLY WITHIN STUD WALL
C.7. WHEN RESTRICTED OTHERWISE ABOVE, AND WHEN SPECIFICALLY DISALLOWED BY THE LOCAL AHJ, OWNER OR BOTH

D. PRIOR TO THE SUBMISSION OF A BID PROPOSAL, E.C. SHALL VERIFY THE PERMISSIBLE USE OF M.C. CABLE WITH THE A.H.J.

CONDUCTOR COLOR CODING

A. PROVIDE COLOR CODING SYSTEM AS LISTED BELOW FOR ALL FEEDERS AND BRANCH CIRCUITS AND USED AS A BASIS FOR BALANCING LOAD ON PANELS, AND FOR PHASE IDENTIFICATION.

B. COLOR CODING FOR CONDUCTOR #12 AWG THROUGH #10 AWG SHALL CONSIST OF COLOR CODED THERMOPLASTIC INSULATION OF THE COLORS SPECIFIED HEREIN.

C. COLOR CODING FOR CONDUCTORS #8 AWG AND LARGER SHALL BE FIELD APPLIED SELF ADHESIVE TAPE OF THE COLOR SPECIFIED HEREIN FOR THE PARTICULAR PHASE.

D. 120/208V: PHASE A--BLACK, PHASE B--RED, PHASE C--BLUE, NEUTRAL--WHITE, EQUIPMENT GROUND--GREEN, ISOLATED GROUND--GREEN WITH DISTINCTIVE WHITE OR YELLOW MARKINGS.

BOXES AND FITTINGS

A. ALL OUTLET BOXES SHALL BE UL LISTED AND LABELED FOR USE IN THE SPACE THEY OCCUPY AND THE PURPOSE THEY SERVE.

B. SHEET METAL OUTLET AND DEVICE BOXES FOR DRY, INTERIOR APPLICATIONS: COMPLY WITH NEMA OS 1 AND UL 514A.

C. CAST-METAL OUTLET AND DEVICE BOXES FOR EXTERIOR APPLICATIONS: COMPLY WITH NEMA FB 1, FERROUS ALLOY, TYPE FS OR FD, WITH GASKETED COVER.

D. OUTLET BOXES INSTALLED WITHIN FIRE RATED ASSEMBLIES SHALL HAVE A FIRE RATING EQUAL TO OR GREATER THAN THE RATING OF THE WALL IN WHICH IT IS INSTALLED.

E. OUTLET BOXES SHALL BE 4 INCHES SQUARE BY 2 1/8 INCHES DEEP , EXCEPT FOR 2" PARTITIONS SHALL BE AT LEAST 1-1/2" DEEP.

F. OUTLET BOXES FOR VOICE AND DATA DEVICES SHALL BE 4 11/16 INCHES SQUARE BY 2 1/8 INCHES DEEP.

G. ALL PULLBOXES SHALL BE CONSTRUCTED OF GALVANIZED STEEL, OF METAL GAUGE AND PHYSICAL SIZE AS REQUIRED BY THE N.E.C. FOR THE NUMBER AND SIZE OF CONDUITS AND CONDUCTORS ASSOCIATED WITH THE PULLBOX.

H. FIXTURE OUTLET BOXES IN/OR ON CEILINGS SHALL NOT BE LESS THAN 1-1/2" DEEP OR LESS THAN 4" SQUARE. ALL OUTLET BOXES INTENDED TO SUPPORT FIXTURES SHALL BE EQUIPPED WITH 3/8" FIXTURE STUDS FASTENED THROUGH THE BOTTOM OF THE BOX WITH FOUR BOLTS.

I. PULLBOXES AND JUNCTION BOXES THAT ARE CUSTOM FABRICATED FOR THE APPLICATION SHALL BE FABRICATED BY A SHOP/FACILITY THAT IS CERTIFIED BY A NRTL FOR THE FABRICATION OF SUCH ENCLOSURES.

J. NEW OUTLET BOXES INSTALLED WITHIN NEW OR EXISTING STUD WALL CONSTRUCTION SHALL BE MOUNTED TO A STUD OR MOUNTED IN A BRACKET THAT SPANS STUD-TO-STUD, CADDY TSGB BRACKET OR APPROVED EQUAL. THE USE OF "OLD WORK" TYPE BOXES THAT. SECURE ONLY TO THE DRYWALL ARE NOT ACCEPTABLE.

K. ACCEPTABLE MANUFACTURERS FOR BOXES: APPLETON, STEEL CITY, RACO.

PANELBOARDS

A. PANELBOARDS SHALL BE LIGHTING AND APPLIANCE TYPE, DEAD FRONT, SAFETY TYPE, FURNISHED WITH BRANCH CIRCUIT BREAKER OVERCURRENT PROTECTIVE DEVICES, COPPER PHASE, NEUTRAL AND EQUIPMENT GROUNDING BUS BARS, MAIN CIRCUIT BREAKER OR MAIN LUG ONLY AS NOTED ON THE DRAWINGS. MAIN BUSES AND CONNECTORS SHALL BE HARD DRAWN COPPER OF 98% CONDUCTIVITY. LOAD CENTERS ARE NOT ACCEPTABLE FOR USE.

B. CIRCUIT BREAKERS SHALL BE MOLDED CASE, BOLT-ON TYPE SUITABLE FOR VOLTAGE AND AMPERE RATINGS INDICATED ON DRAWINGS AND IN PANEL SCHEDULES. REFER TO THE PANEL SCHEDULES ON THE DRAWINGS FOR ADDITIONAL ACCESSORIES TO BE PROVIDED AT SELECT CIRCUIT BREAKERS.

C. CIRCUIT BREAKERS SHALL HAVE A MINIMUM AMPERE INTERRUPTING CAPACITY (AIC) AS DETERMINED BY THE POWER SYSTEMS STUDY.

D. WHERE THE POWER SYSTEM STUDY IDENTIFIES AVAILABLE FAULT CURRENT VALUES AT EXISTING AND NEW PANELS THAT ARE HIGHER THAN THE MINIMUM AIC RATINGS SPECIFIED HEREIN, PROVIDE CIRCUIT BREAKERS IN THE PANELS THAT HAVE AIC RATINGS GREATER THAN THE AVAILABLE FAULT CURRENT AT THE PANEL AS DETERMINED BY THE POWER SYSTEM STUDY.

E. PROVIDE NEMA 1 ENCLOSURES FOR INTERIOR PANELS.

F. PANELBOARDS SHALL BE EQUIPPED WITH FLUSH TYPE LOCK AND CATCH. ALL LOCKS SHALL BE KEYED ALIKE, WITH TWO KEYS SUPPLIED WITH EACH LOCK.

G. CIRCUIT BREAKERS SERVING LIGHTING CIRCUITS SHALL BE RATED FOR SWITCH DUTY.

H. CIRCUIT BREAKERS SERVING HVAC EQUIPMENT SHALL BE HACR RATED.

I. ALL LUGS SHALL BE OF THE SOLDERLESS TYPE AND RATED AT A MINIMUM OF 75°C.

J. PROVIDE NEW CIRCUIT DIRECTORIES WITHIN NEW AND EXISTING PANELS TO REFLECT THE WORK OF THIS CONTRACT. DIRECTORY SHALL BE TYPEWRITTEN OR COMPUTER GENERATED. HANDWRITTEN CIRCUIT DIRECTORIES ARE NOT ACCEPTABLE.

K. UTILIZE FINAL, OWNER ASSIGNED ROOM NAMES AND NUMBERS TO IDENTIFY SPACES WITHIN THE CIRCUIT DIRECTORIES. COMPLY WITH N.E.C. 408.4 WHEN IDENTIFYING CIRCUITS IN CIRCUIT DIRECTORIES.

L. PANEL CIRCUITS SHALL BE CONFIGURED SUCH THAT THE LOAD IS DISTRIBUTED EVENLY ACROSS ALL THREE PHASES TO WITHIN 10% IN ACCORDANCE WITH N.E.C. REQUIREMENTS.

M. ALL NEW AND EXISTING PANELBOARDS SHALL BE LABELED TO IDENTIFY THE AMOUNT OF FAULT CURRENT AVAILABLE AT THE PANEL AS DETERMINED BY THE POWER SYSTEM STUDY TO BE PERFORMED. LABEL SHALL BE MACHINE PRINTED, BLACK TEXT ON CLEAR, SELF ADHESIVE TAPE. INSTALL LABEL ADJACENT TO PANELBOARDS ENGRAVED NAMEPLATE.

N. ALL NEW AND EXISTING PANELBOARDS SHALL BE LABELED TO IDENTIFY THE ARC FLASH HAZARD CHARACTERISTICS AT THE PANEL AS DETERMINED BY THE POWER SYSTEM STUDY TO BE PERFORMED.

O. ALL "SPARE" CIRCUIT BREAKERS SHALL BE SET TO THE "OFF" POSITION.

P. PROVIDE HANDLE TIES ON ALL MULTI-WIRE BRANCH CIRCUITS IN ACCORDANCE WITH N.E.C. 210.4(B)

Q. WHEN NEW CIRCUIT BREAKERS ARE ADDED TO AN EXISTING PANEL, THE NEW CIRCUIT BREAKERS SHALL BE OF THE SAME MANUFACTURE AS THE EXISTING PANEL, SHALL BE OF A 'LETTER TYPE' COMPATIBLE WITH THE EXISTING PANEL SUCH THAT THE UL LISTING OF THE EXISTING PANEL IS MAINTAINED AND SHALL HAVE AN AIC RATING EQUAL TO OR GREATER THAN THE AIC RATING OF THE EXISTING OVERCURRENT PROTECTIVE DEVICES WITHIN THE EXISTING PANEL.

R. ACCEPTABLE MANUFACTURERS FOR PANELBOARDS BY SCHNEIDER, ABB, SIEMENS OR EATON.

SWITCHES

A. TOGGLE SWITCHES SHALL BE SINGLE POLE, 3-WAY OR 4-WAY AS NOTED ON THE DRAWINGS, 20 AMPERES, 120/277 VOLT AC TYPE, SPECIFICATION GRADE WITH SCREW TERMINALS. HUBBELL 1221-X, 1223-X OR 1224-X OR APPROVED EQUIVALENT BY ONE OF THE ADDITIONAL MANUFACTURERS SPECIFIED HEREIN.

B. TOGGLE SWITCHES SHALL BE MOUNTED AT DOORS, INSTALLED ADJACENT TO THE TRIM ON THE STRIKING SIDE OF THE DOOR, REGARDLESS OF THE LOCATION INDICATED ON THE DRAWINGS. VERIFY ALL DOOR SWINGS PRIOR TO INSTALLATION OF OUTLET BOXES FOR SWITCHES.

C. DEVICE COLOR SHALL BE AS SELECTED BY THE OWNER/ARCHITECT.

D. PROVIDE A NEUTRAL CONDUCTOR TO ALL SWITCH LOCATIONS

E. SWITCHES SHALL BE INSTALLED SURFACE MOUNTED IN UNFINISHED AREA. FLUSH MOUNTED IN FINISHED SPACES.

F. ADDITIONAL ACCEPTABLE MANUFACTURERS FOR SWITCHES: LEGRAND, LEVITON.

RECEPTACLES

A. RECEPTACLES SHALL BE 20 AMP, 125 VOLT, 2-POLE, 3-WIRE, GROUNDING TYPE, NEMA 5-20R WITH SCREW TERMINALS. HUBBELL 5362-W OR APPROVED EQUAL BY ONE OF THE ADDITIONAL MANUFACTURERS SPECIFIED HEREIN.

B. GFCI RECEPTACLES SHALL BE 20 AMP, 125 VOLT, 2-POLE, 3-WIRE, GROUNDING TYPE, NEMA 5-20R FEED THROUGH TYPE CAPABLE OF PROTECTING DOWNSTREAM RECEPTACLES ON A SINGLE CIRCUIT, SOLID STATE GROUND FAULT SENSING AND SIGNALING, 5 MILLIAMP TRIP LEVEL, NEMA 5-20R WITH SCREW TERMINALS. HUBBELL GF5362-X OR APPROVED EQUAL BY ONE OF THE ADDITIONAL MANUFACTURERS SPECIFIED HEREIN.

C. PROVIDE SPECIAL PURPOSE RECEPTACLES HAVING NEMA CONFIGURATIONS THAT MATE AND MATCH THE NEMA PLUG CONFIGURATION PROVIDED WITH THE EQUIPMENT TO BE CONNECTED.

D. COVER PLATES FOR EXTERIOR RECEPTACLES SHALL BE RATED FOR "WEATHERPROOF WHILE IN USE".

E. DEVICE COLOR SHALL BE AS SELECTED BY THE OWNER/ARCHITECT.

F. QUAD RECEPTACLES SHALL CONSIST OF (2) DUPLE3X RECEPTACLES INSTALLED IN A SINGLE BOX UNDER A SINGLE COVER PLATE.

G. RECEPTACLES SHALL BE INSTALLED SURFACE MOUNTED IN UNFINISHED SPACES, FLUSH MOUNTED IN FINISHED SPACES.

H. ADDITIONAL ACCEPTABLE MANUFACTURERS FOR SWITCHES AND RECEPTACLES: LEGRAND, LEVITON.

GFCI PROTECTION:

A. ALL KITCHEN SINGLE PHASE RECEPTACLES RATED 150 VOLTS TO GROUND OR LESS, 50 AMPS OR LESS AND THREE PHASE RECEPTACLES RATED 150 VOLTS TO GROUND OR LESS, 100 AMPS OR LESS SHALL HAVE GROUND FAULT CIRCUIT INTERRUPTER PROTECTION FOR PERSONNEL IN ACCORDANCE WITH N.E.C. 210.8, (B), (1) - (10), OR THE EQUIVALENT REQUIREMENT WITHIN THE APPLICABLE ELECTRICAL CODE.

B. THE "GFCI" NOTATION AT A DEVICE OR CIRCUIT BREAKER INDICATES THAT GFCI PROTECTION SHALL BE PROVIDED FOR THE CIRCUIT OR CIRCUITS INDICATED. GFCI PROTECTION SHALL BE PROVIDED BY ONE OF THE FOLLOWING MEANS:

- INTEGRAL GFCI PROTECTION WITHIN THE DEVICE (NEMA 5-20R RECEPTACLES), WHEN THE DEVICE IS ABLE TO BE INSTALLED IN A READILY ACCESSIBLE LOCATION AS DEFINED BY THE APPLICABLE ELECTRICAL CODE.
- GFCI CIRCUIT BREAKER INSTALLED WITHIN THE PANEL FOR SERVICE TO THE CIRCUIT OR CIRCUITS.
- GFCI CIRCUIT BREAKER INSTALLED WITHIN AN INDIVIDUAL ENCLOSURE EXTERNAL TO THE PANEL FOR SERVICE TO THE CIRCUIT.
- DEAD-FRONT GFCI DEVICE INSTALLED IN A READILY ACCESSIBLE LOCATION AS DEFINED BY THE N.E.C. (APPLICABLE TO 20 AMP, 120 VOLT CIRCUITS).
- AN INDIVIDUALLY MOUNTED EXTERNAL SPECIAL PURPOSE GROUND FAULT CIRCUIT INTERRUPTER (SPGFCI) DEVICE SIMILAR TO "SHOCK BLOCK" PRODUCTS AS MANUFACTURED BY LITTLEFUSE, OR APPROVED EQUAL.
- DEAD FRONT DEVICES SHALL BE BE LABELED TO IDENTIFY THE CIRCUIT AND THE LOAD SERVED BY THE DEVICE.

C. ALL GFCI RECEPTACLES SHALL BE PROVIDED WITH A DEDICATED NEUTRAL CONDUCTOR.

COVER PLATES FOR TOGGLE SWITCHES AND RECEPTACLES

A. COVER PLATES WITHIN NON-FOOD SERVICE AREAS SHALL BE NYLON, OF CONFIGURATION TO MATCH THE WIRING DEVICE.

B. COVER PLATES WITHIN THE FOOD SERVICE AREA SHALL BE STAINLESS STEEL WITH STAINLESS STEEL HARDWARE, UNLESS OTHERWISE NOTED.

C. CONFIGURATION AND COLOR OF COVER PLATE SHALL MATCH THAT OF THE WIRING DEVICE THAT THE PLATE WILL BE INSTALLED ON.

D. COVER PLATE COLOR SHALL BE AS SELECTED BY THE OWNER/ARCHITECT.

E. ADDITIONAL ACCEPTABLE MANUFACTURERS FOR COVER PLATES: LEGRAND, LEVITON.

MOUNTING HEIGHTS FOR ELECTRICAL DEVICES AND EQUIPMENT

A. DEVICES AND EQUIPMENT SHALL BE INSTALLED AT THE MOUNTING HEIGHTS NOTED BELOW UNLESS NOTED OTHERWISE ON THE DRAWINGS OR REQUIRED BY APPLICABLE CODES AND STANDARDS:

1. TOGGLE SWITCHES, WALL SWITCH OCCUPANCY SENSORS, VACANCY SENSORS AND DIMMERS FOR LIGHTING CONTROL - TOP OF DEVICE 48" AFF
2. CONVENIENCE RECEPTACLES -TOP OF DEVICE 18" AFF
3. CONVENIENCE RECEPTACLES AT COUNTERTOPS - BOTTOM OF DEVICE 44" AFF OR AS NOTED ON THE DRAWINGS
4. RECEPTACLES AT FOOD SERVICE EQUIPMENT - AS INDICATED ON THE FINAL, APPROVED FOOD SERVICE SHOP DRAWINGS.
5. TELEPHONE AND DATA OUTLETS - TOP OF DEVICE 18" AFF, 44" AFF WHEN INSTALLED AT COUNTER TOPS.
6. DISCONNECT SWITCHES - TOP OF ENCLOSURE 66" AFF
7. PANELBOARDS - TOP OF ENCLOSURE 72" AFF

DISCONNECT SWITCHES

A. DISCONNECT SWITCHES SHALL BE HEAVY DUTY TYPE, UL LISTED AND LABELED, EQUIPPED WITH A LUG FOR TERMINATION OF THE EQUIPMENT GROUNDING CONDUCTOR.

B. DISCONNECT SWITCHES SHALL BE LOCKABLE WITH NEMA 1 ENCLOSURES FOR DRY, INDOOR APPLICATIONS; NEMA 3R ENCLOSURES FOR OUTDOOR OR WET LOCATION APPLICATIONS.

C. DISCONNECT SWITCHES INSTALLED EXPOSED IN FOOD SERVICE AREAS SHALL BE NEMA 4X STAINLESS STEEL, LOCKABLE.

D. TOGGLE DISCONNECTS SHALL BE 20A OR 30A AS REQUIRED. SINGLE POLE, 2-POLE OR 3-POLE AS REQUIRED, SINGLE THROW, MOTOR RATED SWITCH WITHOUT OVERLOAD PROTECTION. NEMA 1, 3R OR 4X STAINLESS STEEL ENCLOSURE AS REQUIRED BY APPLICATION, PADLOCK ATTACHMENT

E. ALL DISCONNECT SWITCHES SHALL BE EQUIPPED WITH AN ENGRAVED NAMEPLATE TO IDENTIFY THE SERVING PANEL, CIRCUIT NUMBERS AND THE LOAD SERVED BY THE SWITCH.

F. ACCEPTABLE MANUFACTURERS FOR DISCONNECT SWITCHES: SCHNEIDER, ABB, SIEMENS OR EATON.

LIGHTING FIXTURES

A. ALL LIGHTING FIXTURES AND LIGHT SOURCES SHALL BE FURNISHED, INSTALLED AND CONNECTED BY THE ELECTRICAL CONTRACTOR, UNLESS NOTED OTHERWISE.

B. THIS CONTRACTOR SHALL INSTALL LIGHTING FIXTURES AND LIGHT SOURCES AS INDICATED ON THE DRAWINGS AND AS SPECIFIED BELOW. PROVIDE LIGHTING FIXTURES COMPLETE WITH HANGERS, PLASTER FRAMES, AND ALL OTHER NECESSARY ACCESSORIES

C. LED DRIVERS SHALL BE SOLID STATE AND ACCEPT 120 THROUGH 277 VAC AT 60 HZ INPUT.

D. THE LED LIGHT SOURCE SHALL BE FULLY DIMMABLE WITH USE OF COMPATIBLE DIMMER SWITCH DESIGNATED FOR LOW VOLTAGE LOADS.

E. THE CONTRACTOR SHALL PROVIDE LIGHTING CONTROL DEVICES (DIMMERS) THAT ARE COMPATIBLE WITH LED DRIVER BEING PROVIDED WITH THE FIXTURE.

F. EXIT SIGNS INDICATED AS PROVIDING POWER TO REMOTE EXTERIOR EGRESS LIGHTS SHALL BE EQUIPPED WITH THE INCREASED BATTERY CAPACITY TO SERVE THE REMOTE EMERGENCY LIGHT. REMOTE EMERGENCY LIGHT SHALL BE A STANDARD ACCESSORY OF THE INTERIOR EXIT SIGN TO WHICH CONNECTED.

LIGHTING CONTROLS

A. TIME SWITCHES, PHOTOCELLS AND CONTACTORS SHALL BE AS DETAILED ON DRAWINGS.

B. WALL SWITCH OCCUPANCY SENSORS SHALL BE WATT STOPPER WS-250 OR APPROVED EQUAL.

C. PROVIDE A NEUTRAL CONDUCTOR TO ALL SWITCH LOCATIONS

ROUGH-IN SYSTEM FOR VOICE AND DATA

A. PROVIDE A ROUGH-IN SYSTEM AS SPECIFIED HEREIN FOR SERVICE TO THE OWNER'S VOICE AND DATA NETWORK.

B. PROVIDE A PLYWOOD BACKBOARD FOR TERMINATION OF TELEPHONE SERVICE AND DISTRIBUTION COMPONENTS. PLYWOOD BACKBOARD SHALL BE 2' X 3' X 3/4'", FIRE RATED, PAINTED WITH TWO (2) COATS OF LIGHT GRAY ENAMEL PAINT. MASK FIRE RATED LABEL TO PREVENT THE LABEL FROM BEING PAINTED OVER.

C. OUTLET BOXES FOR TELEPHONE AND DATA DEVICES SHALL CONSIST OF 4 11/16 IN SQUARE BY 2 1/8 INCH DEEP OUTLET BOXES WITH SINGLE DEVICE COVER.

D. PROVIDE A 3" EMPTY CONDUIT WITH PULLSTRING FROM THE WALL MOUNTED PLYWOOD TELEPHONE TERMINAL BOARD IN THE TENANT SPACE TO THE LANDLORDS TELEPHONE DISTRIBUTION OR POINT OF SERVICE DELIVERY. PROVIDE A NYLON BUSHING ON EACH END OF CONDUIT FOR CABLE PROTECTION.

E. ROUGH-IN FOR WIRING DROPS TO WALL MOUNTED VOICE AND DATA DEVICES SHALL BE INSTALLED WITHIN EMT CONDUIT, 1". PROVIDE A CONDUIT STUB FROM THE DEVICE BOX TO ABOVE ACCESSIBLE CEILING. PROVIDE A PLENUM RATED NYLON BUSHING ON THE END OF THE CONDUIT STUB FOR PROTECTION OF THE WIRING.

F. PRIOR TO BEGINNING WORK, THIS CONTRACTOR SHALL FULLY COORDINATE HIS CONSTRUCTION OPERATIONS AND ALL TERMINATION LOCATIONS WITH AUTHORIZED REPRESENTATIVE OF THE TELEPHONE UTILITY COMPANY AND THE OWNER'S DATA NETWORK PROVIDER BY TIMELY NOTICE OR SCHEDULING OF SERVICE EQUIPMENT DATES, SERVICE MODIFICATION DATES AND NOTIFICATION OF REQUIRED OWNER AUTHORIZATIONS INVOLVING THE UTILITY COMPANY.

DUCT MOUNTED SMOKE DETECTORS (WHERE REQUIRED)

A. PROVIDE A 120 VOLT POWER SOURCE TO ALL DUCT MOUNTED SMOKE DETECTORS INSTALLED WITHIN NEW AND EXISTING MECHANICAL EQUIPMENT

B. PROVIDE A DUCT MOUNTED SMOKE DETECTORS WITHIN NEW AND EXISTING MECHANICAL EQUIPMENT AS REQUIRED BY APPLICABLE CODES. FINAL ELECTRICAL CONNECTION AND ALL INTERLOCK WIRING BY THE ELECTRICAL CONTRACTOR.

C. PROVIDE ALL INTERLOCK WIRING IN CONDUIT BETWEEN ALL DUCT DETECTORS SUCH THAT UPON DETECTING SMOKE IN ANY ONE DETECTOR, ALL ROOF TOP UNITS SHALL BE SHUT DOWN.

D. PROVIDE TEST/RESET SWITCH AND PIEZO ALERT SOUNDER AND REMOTE ANNUNCIATOR ALARM LED MOUNTED AS DIRECTED BY LOCAL AHJ. EC TO PROVIDE ALL REQUIRED INTERLOCK WIRING BETWEEN DUCT DETECTOR AND REMOTE SWITCH.

E. REFER TO DETAILS ON MECHANICAL DRAWINGS FOR ADDITIONAL INFORMATION.

TESTING

A. PROVIDE ALL TESTS AS REQUIRED BY THE AUTHORITY HAVING JURISDICTION.

B. PROVIDE THE TESTS AS OUTLINED HEREINAFTER AND OTHER TESTS REQUIRED TO ESTABLISH THE ADEQUACY, QUALITY, SAFETY, COMPLETED STATUS AND SUITABLE OPERATION OF EACH SYSTEM.

C. PROMPTLY CORRECT ANY FAILURES, DEFICIENCIES AND/OR DEFECTS REVEALED BY THESE TESTS. AFTER CORRECTING FAILURES, DEFICIENCIES OF DEFECTS, CONDUCT NEW TESTING TO VERIFY THAT THE DEFICIENCY HAS BEEN RECTIFIED AND THE SYSTEM IS FUNCTIONING PROPERLY.

D. NEW AND EXISTING PANELBOARDS SHALL HAVE PHASE CURRENTS BALANCED TO WITHIN +/- 10% VARIATION BETWEEN AVERAGE PHASE CURRENT AND MEASURED INDIVIDUAL PHASE.

E. AN OPERATIONAL TEST OF THE EMERGENCY LIGHTING/EXIT SIGNAGE SYSTEM SHALL BE PERFORMED IN THE PRESENCE OF THE OWNER AND THE AUTHORITY HAVING JURISDICTION TO DEMONSTRATE PROPER OPERATION AND COMPLIANCE WITH APPLICABLE CODES AND SPECIFIED REQUIREMENTS.

OPERATION AND MAINTENANCE MANUALS

A. THIRTY (30) DAYS PRIOR TO SUBSTANTIAL COMPLETION, SUBMIT OPERATING AND MAINTENANCE MANUALS FOR EQUIPMENT TO ENGINEER FOR APPROVAL. INCLUDE ONE COPY OF EACH FINAL APPROVED SUBMITTAL FOR RECORD PURPOSES, INDICATING THE ACTUAL PRODUCT INSTALLED. INCLUDE SIGNIFICANT CHANGES IN THE PRODUCT DELIVERED TO PROJECT SITE AND CHANGES IN MANUFACTURER'S WRITTEN INSTRUCTIONS FOR INSTALLATION.

B. PROVIDE COMPREHENSIVE CONTACT LIST INCLUDING CONTRACTOR AND SUBCONTRACTOR'S NAMES, ADDRESSES, TELEPHONE AND CONTACT PERSON FOR OWNER'S USE.

WARRANTY

A. THE CONTRACTOR SHALL GUARANTEE ALL MATERIALS, EQUIPMENT AND THE INSTALLATION TO BE FREE OF DEFECTS THAT MAY DEVELOP IN ANY PART OF THEIR WORK CAUSED BY FAULTY WORKMANSHIP, MATERIAL OR EQUIPMENT FAILURES, FOR A MINIMUM OF ONE (1) YEAR FROM THE DATE OF SUBSTANTIAL COMPLETION OR FOR AS LONG AS NORMAL EQUIPMENT MANUFACTURER WARRANTIES ARE IN EFFECT FROM THE DATE OF OWNER ACCEPTANCE OF THE PROJECT, WHICHEVER IS LATER.

B. DURING THE ONE (1) YEAR WARRANTY PERIOD, THE CONTRACTOR SHALL BE RESPONSIBLE FOR ANY DAMAGE TO THE PREMISES CAUSED BY DEFECTS IN WORKMANSHIP OR DEFECTS IN THE WORK OR EQUIPMENT FURNISHED AND/OR INSTALLED UNDER THE WORK OF THE ELECTRICAL CONTRACT.

FIRE ALARM SYSTEM

A. FIRE ALARM SYSTEM WORK IS A DELEGATED DESIGN AND IS NOT INCLUDED AS PART OF THE ELECTRICAL SCOPE OF WORK.

B. FIRE ALARM SYSTEM WORK SHALL BE PROVIDED BY THE GENERAL CONTRACTOR AS A DELEGATED DESIGN.

C. GENERAL CONTRACTOR (GC) SHALL BE RESPONSIBLE FOR RETAINING THE SERVICES OF A FIRE ALARM SYSTEM VENDOR/DESIGN PROFESSIONAL TO PREPARE THE FIRE ALARM SYSTEM DESIGN, DETAILS, CALCULATIONS, ETC. AS REQUIRED BY ALL APPLICABLE CODES AND THE AUTHORITY HAVING JURISDICTION.

D. GC/VENDOR/DESIGN PROFESSIONAL SHALL BE RESPONSIBLE FOR VERIFYING ALL APPLICABLE CODE REQUIREMENTS AND ALL LOCAL FIRE ALARM SYSTEM REQUIREMENTS WITH THE LOCAL AUTHORITY HAVING JURISDICTION.

E. GC/VENDOR/DESIGN PROFESSIONAL SHALL BE RESPONSIBLE FOR PROVIDING ALL REQUIRED SUBMITTAL DRAWINGS TO THE AUTHORITY HAVING JURISDICTION FOR REVIEW AND APPROVAL PRIOR TO COMMENCING WORK.

F. GC/VENDOR SHALL BE RESPONSIBLE FOR OBTAINING ALL REQUIRED PERMITS FOR THE FIRE ALARM WORK.

HOOD FIRE SUPPRESSION SYSTEM - ELECTRICAL WORK

A. ELECTRICAL CONTRACTOR SHALL PROVIDE ALL CONTROL WIRING INSTALLED WITHIN CONDUIT BETWEEN THE HOOD FIRE SUPPRESSION SYSTEM CONTROL PANEL AND ANY COMPONENT REQUIRED TO BE AUTOMATICALLY CONTROLLED OR DISCONNECTED FROM ITS POWER SUPPLY UPON ACTIVATION OF THE HOOD FIRE SUPPRESSION SYSTEM.

B. COMPONENTS TO BE CONNECTED TO THE HOOD FIRE SUPPRESSION SYSTEM CONTROL PANEL INCLUDE, BUT ARE NOT NECESSARILY LIMITED TO, THE SHUNT-TRIP CIRCUIT BREAKERS IN AN ELECTRICAL PANEL, THE COIL OF ANY SHUNT-TRIP CONTACTOR, ELECTRICALLY OPERATED GAS VALVE.

C. EC TO COORDINATE ALL ELECTRICAL WORK WITH MECHANICAL CONTRACTOR AND HOOD FIRE SUPPRESSION SYSTEM INSTALLER.

Oculus Inc.
1 S. Memorial Dr., Suite 1500
St. Louis, MO 63102
314.367.6100
www.oculusinc.com

CASE Engineering Inc.
796 Merus Court
St. Louis, MO 63026
T 636.349.1600
F 636.349.1730
CERTIFICATE OF AUTHORITY NO. 4554-11

NINO'S Southern Sides

#	Description	Date

WISCONSIN
MATTHEW R. CASE
E-49681
ST. LOUIS
MO
PROFESSIONAL ENGINEER

12/11/2024

These drawings/specifications are the property of Oculus Inc. They are furnished as contract documents only. The seal(s) and signature(s) apply only to the document to which they are affixed, and expressly disclaim any responsibility for all other plans, specifications, estimates, reports or other documents or instruments relating to or intended to be used for any part or parts of the architectural or engineering project. Additionally these drawings and seal(s) shall in no way convey or imply any type of warranty or certification relating to the performance of products and materials beyond those provided by their respective manufacturer.
© 2024 Oculus Inc.

- ISSUED FOR PERMIT

Client Approval

Project #	68423-WI01
Issue Date	12/11/2024
Scale	AS INDICATED
Drawn by	
Checked by	

E001

TI TEMPLATE V1.0
10-11-2011

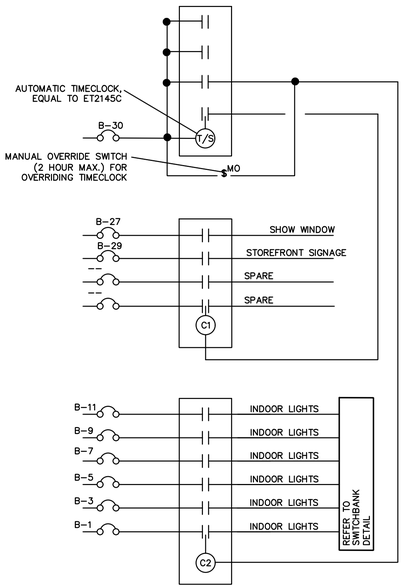

*CIRCUIT EGRESS/NIGHT LIGHT/EXIT LIGHTING AHEAD OF ALL LIGHTING CONTROLS

2 LIGHTING CONTROLDIAGRAM
NTS

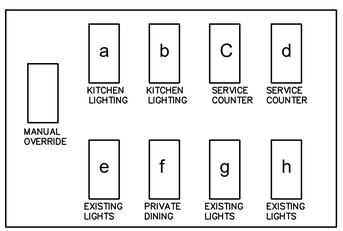

*SWITCHBANK DETAIL SHOWN FOR GENERAL REFERENCE PURPOSES ONLY FOR CONNECTION OF NEW LIGHTING.. E.C. SHALL VERIFY LOCATION OF EXISTING SWITCHBANK, QUANTITY AND TYPES OF CONTROLS AND COORDINATE NEW WORK WITH EXISTING CONDITIONS. LIGHTING CONTROLS IN NON-FOOD HANDLING AREAS SHALL BE DIMMING TYPE, AND COMPATIBLE WITH NEW/EXISTING LIGHT FIXTURES. MAINTAIN OR PROVIDE NEW CONTROLS FOR CONNECTION OF EXISTING TO REMAIN LIGHTING IN EXISTING AREAS.

3 SWITCHBANK DETAIL
NTS

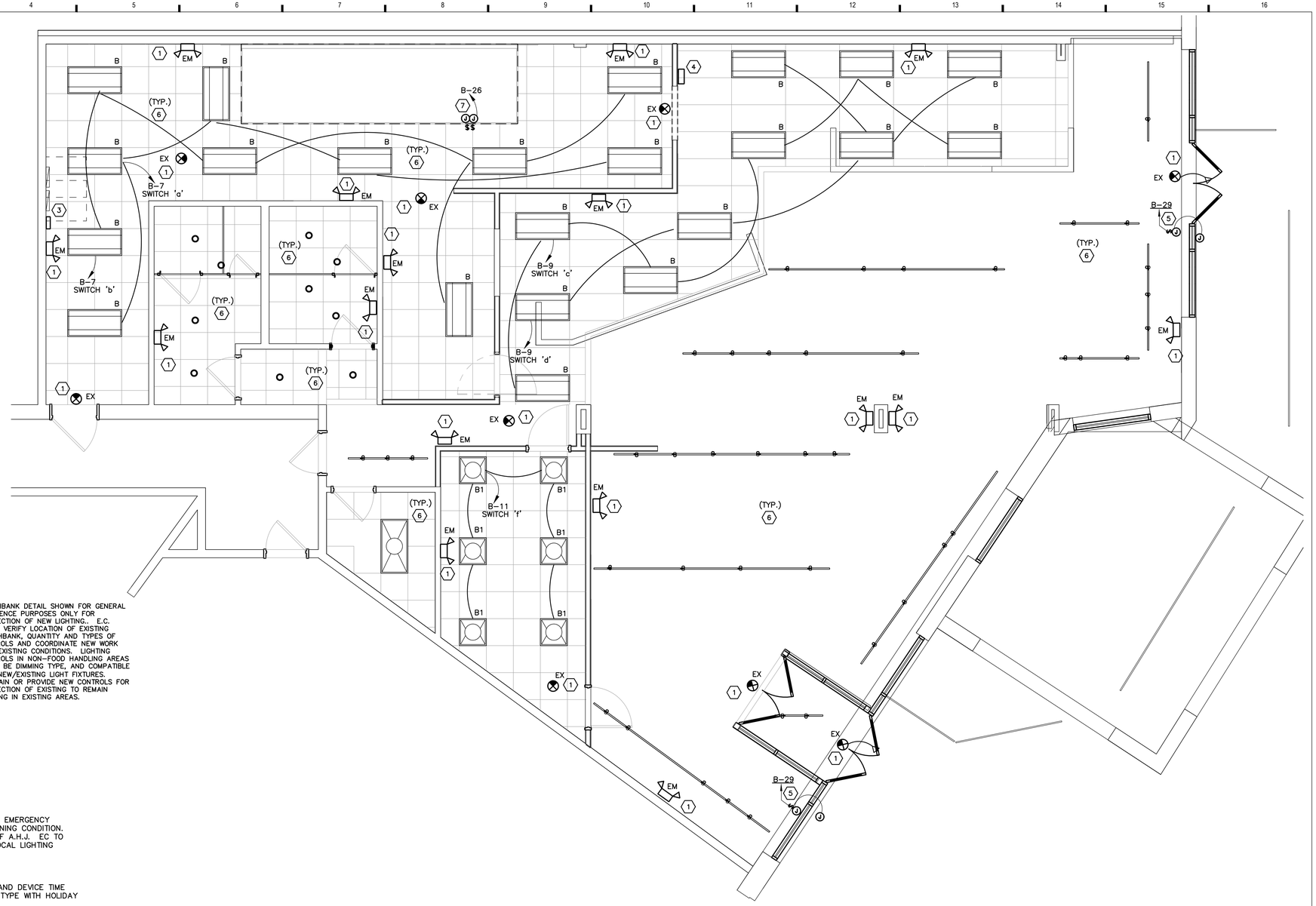

1 LIGHTING PLAN
Scale: 1/4" = 1'-0"

KEYED NOTES

1. PROPOSED LOCATION OF NEW EMERGENCY LIGHTING FIXTURE. IF EXISTING EMERGENCY LIGHTING IS LOCATED NEARBY TO EXISTING, RE-USE IF IN FULLY FUNCTIONING CONDITION. PROVIDE ADDITIONAL EMERGENCY LIGHTING FIXTURES AT THE DIRECTION OF A.H.J. EC TO CONNECT EMERGENCY LIGHTS AND EXIT SIGNS TO UNSWITCHED LEG OF LOCAL LIGHTING CIRCUIT.
2. NOT USED.
3. PROPOSED TIMECLOCK LOCATION. E.C. TO COORDINATE FINAL LOCATION AND DEVICE TIME SETTINGS WITH OWNER. TIMECLOCK SHALL BE DIGITAL, 24 HOUR, 7 DAY TYPE WITH HOLIDAY OVERRIDE, BATTERY BACK-UP AND MANUAL CONTROL.
4. VERIFY EXISTING SWITCHBANK LOCATION. IF EXISTING SWITCHBANK IS ON A SURFACE TO BE DEMO'D OR WOULD BE INACCESSIBLE DUE TO NEW WORK, RELOCATE IN COORDINATION WITH G.C.. LOCATE IN COORDINATION WITH OWNER, G.C. PRIOR TO ROUGH-IN. SEE DETAILS THIS SHEET FOR ADDITIONAL INFORMATION.
5. COORDINATE WITH OWNER, ARCHITECTURAL DRAWING FOR INSTALLATION OF EXTERIOR SIGNAGE. PROVIDE OUTDOOR WET LOCATION RATED JUNCTION BOX FOR SIGN CONNECTION AS DETERMINED BY SIGN VENDOR, AND 20A, SINGLE POLE DISCONNECT SWITCH INDOORS FOR SHUT-OFF. SIGN TO BE CONNECTED TO TENANT'S LIGHTING CONTROL SYSTEM.
6. LIGHTING FIXTURES NOT PROVIDED WITH A FIXTURE TAG ARE EXISTING TO REMAIN. CLEAN AND RE-LAMP FIXTURES. NEW LAMPS SHALL BE EQUAL OR LESSOR WATTAGE OF EXISTING, THE SAME COLOR TEMPERATURE AS EXISTING AND OF THE SAME BASE AND LAMP SHAPE AS EXISTING. E.C. SHALL RE-CONNECT EXISTING CIRCUITS TO NEW PANEL 'B', CIRCUITS 'B-1', 'B-3', 'B-5'. COMBINE CIRCUITS WHERE POSSIBLE AND PROVIDE ADDITIONAL CIRCUITS WHERE NECESSARY.
7. PROVIDE CONNECTION TO HOOD LIGHTING AND CONTROLS IN COORDINATION WITH HOOD VENDOR DRAWINGS. VERIFY LOCATION OF ROUGH-IN PRIOR TO ANY WORK.

LUMINAIRE SCHEDULE

TYPE	DESCRIPTION	MANUFACTURER	MODEL	HOUSING/ MOUNTING	LAMP TYPE	COMMENTS	VOLTS	INPUT WATTS
B	2'X4' LAY-IN LIGHT	PLT SOLUTIONS	PLT-20295	LAY-IN	LED	–	120	50
B1	2'X2' LAY-IN LIGHT	NORA LIGHTING	PLT-90294	LAY-IN	LED	–	120	35
EX	EM/EXIT COMBO W/ OPT. REMOTE HEAD	DUAL LITE	CLSCSRW-3 (OPTION 'RC' FOR REMOTE HEAD)	SURFACE	LED	#CRH – REMOTE HEAD	120	5W MAX
EM	EMERGENCY LTG	DUAL LITE	CCU2	SURFACE	LED		120	5W MAX

Oculus Inc.
1 S. Memorial Dr., Suite 1500 St. Louis, MO 63102
314.367.6100 www.oculusinc.com

CASE Engineering Inc.
796 Meriux Court St. Louis, MO 63026
T 636.349.1600 F 636.349.1730
CERTIFICATE OF AUTHORITY NO. 4254-11

NINO'S Southern Sides

#	Description	Date

WISCONSIN MATTHEW R. CASE E-49681 ST. LOUIS MO PROFESSIONAL ENGINEER

12/11/2024

These drawings/specifications are the property of Oculus Inc. They are furnished as contract documents only. The seal(s) and signature(s) apply only to the document to which they are affixed, and expressly disclaim any responsibility for all other plans, specifications, estimates, reports or other documents or instruments relating to or intended to be used for any part or parts of the architectural or engineering project. Additionally these drawings and seal(s) shall in no way convey or imply any type of warranty or certification relating to the performance of products and materials beyond those provided by their respective manufacturer.
© 2024 Oculus Inc.

- ISSUED FOR PERMIT

Client Approval

Project #	68423-WI01
Issue Date	12/11/2024
Scale	AS INDICATED
Drawn by	
Checked by	

E101

TI TEMPLATE V1.0
10-11-2011

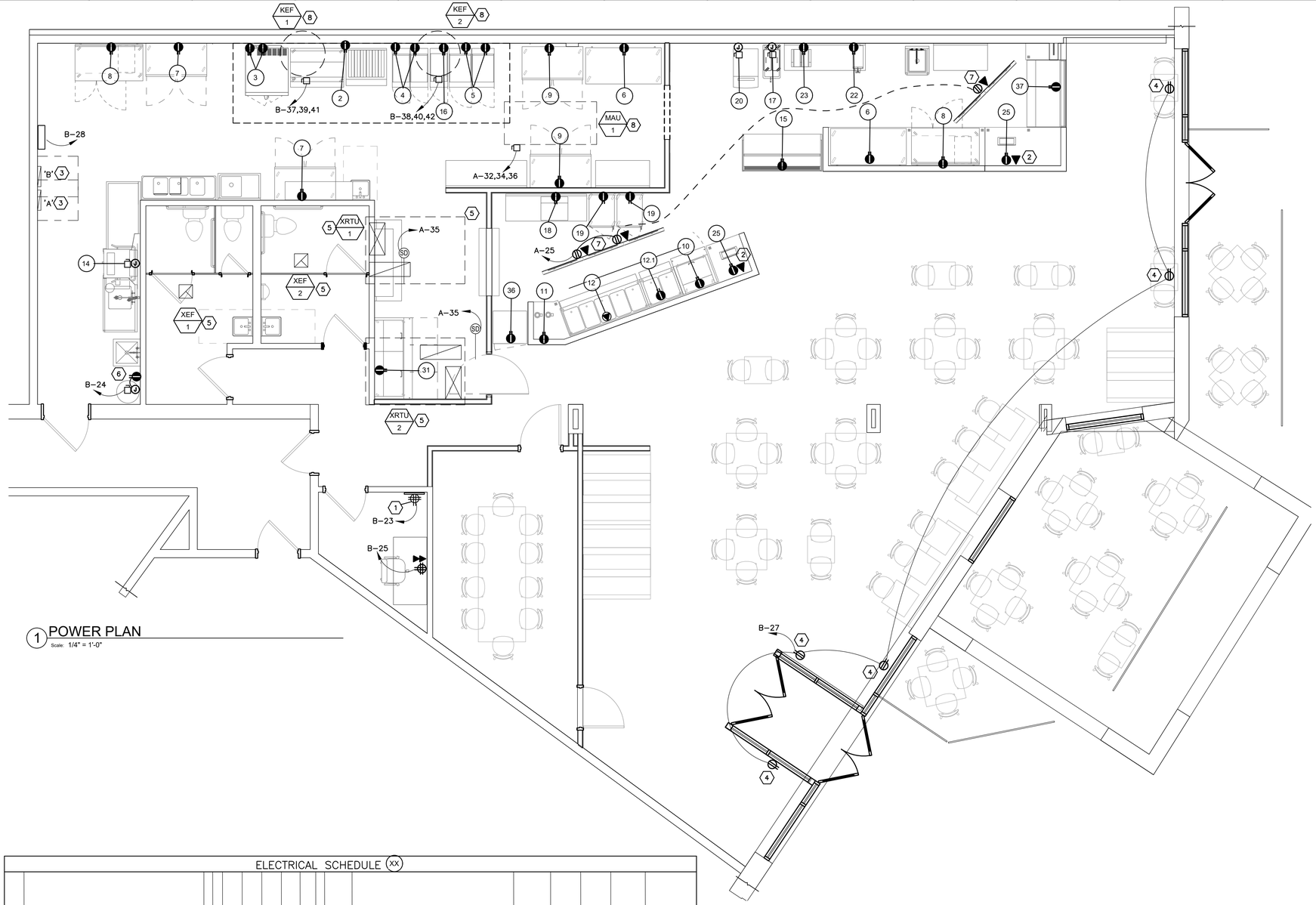

1 POWER PLAN

Scale: 1/4" = 1'-0"

KEYED NOTES (XX)

1. EC TO PROVIDE 24"X36", 3/4" PLYWOOD TELEPHONE TERMINATION BOARD TREATED WITH FIRE RETARDANT PAINT FOR TERMINATION OF TELECOMMUNICATIONS EQUIPMENT. PROVIDE GROUND BAR MOUNTED TO TTB WITH (1)#6 GROUND WIRE PROVIDED IN 1/2" CONDUIT TO SERVING PANELBOARD, CONNECT TO EQUIPMENT GROUNDING TERMINAL IN PANEL.
2. E.C. TO PROVIDE CONDUIT BENEATH CASEWORK FOR POWER AND DATA TO REGISTERS. PROVIDE MIN. (2) 3/4" CONDUIT FOR POWER AND (1) 1" EMPTY CONDUIT W/ PULL STRING FOR DATA LINES. COORDINATE ROUTING IN FIELD.
3. LOCATION OF NEW/EXISTING ELECTRICAL PANELBOARDS, SEE RISER DIAGRAM AND PANEL SCHEDULE SHEET E301 FOR DETAILS.
4. PROVIDE SHOW WINDOW RECEPTACLES AS MEETING N.E.C. 210.62
5. FIELD VERIFY CONDITIONS OF EXISTING HVAC EQUIPMENT. VERIFY EXISTING HVAC RECEPTACLES IN WEATHERPROOF WHILE-IN-USE COVERS AT RTU'S. IF NOT EXISTING THEN PROVIDE NEW GFCI RECEPTACLES AND WEATHERPROOF WHILE-IN-USE COVERS. PROVIDE ANY ELECTRICAL REPAIRS TO DISCONNECTS, CONNECTIONS, OUTLETS, ETC. AS REQUIRED FOR CODE COMPLIANCE AND PROPER EQUPMENT FUNCTIONALITY. WHERE NOT EXISTING, PROVIDE CONNECTION TO NEW DUCT SMOKE DETECTORS AS PROVIDED BY MECHANICAL CONTRACTOR, AND ALL WIRING TO REMOTE TESTING DEVICES AS LOCATED BY A.H.J.
6. COORDINATE ELECTRICAL WORK FOR CONNECTION OF NEW GAS WATER HEATER WITH PLUMBING CONTRACTOR. PROVIDE 20A, SINGLE POLE DISCONNECT SWITCH. PROVIDE GFCI RECEPTACLE FOR CONNECTION OF NEW RECIRCULATION PUMPS IN COORDINATION WITH PLUMBING CONTRACTOR, VERIFY HEIGHT AND LOCATION PRIOR TO ROUGH-IN.
7. PROVIDE POWER/DATA IN CEILING FOR CONNECTION OF MENUBOARDS. CONCEAL RECEPTACLES WHERE POSSIBLE, COORDINATE FINAL LOCATION W/ G.C. PRIOR TO ROUGH-IN.
8. E.C. TO PROVIDE #12 CONDUCTORS TO MANUFACTURER INSTALLED DISCONNECT SWITCH FOR CONNECTION OF MAU-1, KEF-1, KEF-2, AND . COORDINATE WITH HOOD VENDOR DRAWINGS AND MECHANICAL CONTRACTOR FOR CONTROL WIRING AND REQUIREMENTS.

ELECTRICAL SCHEDULE (XX)

ITEM NO	EQUIPMENT CATEGORY	DIRECT	PLUG	AMPS	KW	HP	VOLTS	CYCLE	PHASE	NEMA	ELEC REMARKS	CIRCUIT POLES		WIRE SIZE	GND SIZE	CONDUIT SIZE	CIRCUIT NO.
#2	GAS RANGE - ATOSA #AGR-8B-NG		X	1.5	0.18		120	60	1	5-15R		15	1	2 #12	12	3/4"	B-16
#3	GAS OVEN - FALCON EQUIPMENT #ACO-2		X	4.0	0.48	1/2	120	60	1	5-15R	ELECTRICAL DATA NOT AVAIALBLE, E.C. SHALL VERIFY PRIOR TO ROUGH-IN. 2 CIRCUITS REQ.	15	1	2 #12	12	3/4"	B-2 | B-4
#4	GAS FRYER - PITCO FRIALATOR #45-C+S		X	5.0	0.6		120	60	1	5-15R	ENGINEER COULD NOT VERIFY POWER REQUIRED,	15	1	2 #12	12	3/4"	B-6 | B-8
#5	GAS FRYER - PITCO FRIALATOR #65-C+S		X	5.0	0.6		120	60	1	5-15R	E.C. SHALL VERIFY PRIOR TO ROUGH-IN	15	1	2 #12	12	3/4"	B-10 | B-12
#6	WORKTOP FRIDGE - TRUE #WT-60F		X	2.9	0.35		120	60	1	5-15R		15	1	2 #12	12	3/4"	B-13 | B-15
#7/9	REACH-IN FREEZER - TRAULSEN #G20010-032		X	7.9	0.95		120	60	1	5-20R		20	1	2 #12	12	3/4"	A-8 | A-10 A-12 | A-13
#8	WORKTOP FRIDGE - TRUE #TWT-60-32-HC		X	1.7	0.2		120	60	1	5-15R		15	1	2 #12	12	3/4"	B-17 | B-18
#10	WORKTOP FRIDGE - TRUE #TFP-32-12M		X	3.3	0.4		120	60	1	5-15R		15	1	2 #12	12	3/4"	B-21
#11	FOOD WARMER - VOLLRATH #46060		X	1.9	0.23		120	60	1	5-15R	CONNECT (2) DEVICES ON ONE CIRCUIT	15	1	2 #12	12	3/4"	B-20
#12	HOT FOOD WELL - VOLLRATH #38005		X	20.0	2.4		120	60	1	5-30R		30	1	2 #10	10	3/4"	A-14
#12.1	HOT FOOD WELL - VOLLRATH #38002		X	8.0	0.96		120	60	1	5-15R		15	1	2 #12	12	3/4"	A-23
#14	DISHWASHER - CMA DISHMACHINE #CMA-180-VL-FL	X		49.0	17.64		208	60	3		PROVIDE 100A, 3-POLE, NEMA 4X STAINLESS STEEL DISCONNECT, VERIFY EQUIPMENT NAMEPLATE DATA	70	3	3 #4	8	1"	A-2,4,6
#15	REFRIGERATED CASE- FALCON EQUIPMENT #ADC-163		X	4.8	0.58		120	60	1	5-15R		15	1	2 #12	12	3/4"	A-24
#16	FRY DUMP STATION - PITCO FRIALATOR #SSHBNB55		X	6.3	0.76		120	60	1	5-15R		15	1	2 #12	12	3/4"	B-14
#17	SOFT SERVE MACHINE - TALOR #C723-33	X		25.0	9.0		208	60	3		PROVIDE 30A, 3-POLE, NEMA 4X STAINLESS STEEL DISCONNECT, VERIFY EQUIPMENT NAMEPLATE DATA	30	3	3 #10	10	3/4"	A-7,9,11
#18	HOT CUTTING BOARD - VOLLRATH #46670		X	4.2	0.50		120	60	1	5-15R		15	1	2 #12	12	3/4"	B-22
#19	HEATED CABINETS - ALTO-SHAAM #1000-UP-QS		X	16.0	1.92		120	60	1	5-20R		20	1	2 #12	12	3/4"	A-15 | A-17
#20	ICE MACHINE - SCOTSMAN #C0522MA-1	X		13.5	1.62		120	60	1		PROVIDE 20A, SINGLE POLE DISCONENCT SWITCH	20	1	2 #12	12	3/4"	A-16
#22	COFFEE BREWER - BUNN #23001.0006		X	11.4	1.37		120	60	1	5-15R		15	1	2 #12	12	3/4"	A-18
#23	DRINK DISPENSER - CRATHCO #D25-4		X	6.0	0.72		120	60	1	5-15R		15	1	2 #12	12	3/4"	A-19
#25	P.O.S. REGISTER - NO MANUFACTURER/MODEL GIVEN		X	5.0	0.60		120	60	1	5-20R		20	1	2 #12	12	3/4"	A-20 | A-22
#31	COLD FOOD TABLE - TRUE #TFP-72-30M-D-6		X	5.1	0.61		120	60	1	5-15R		15	1	2 #12	12	3/4"	A-21
#36	REFRIG. MERCHANDISER - FALCON EQUIP. #AGM-22		X	2.88	0.35		120	60	1	5-15R		15	1	2 #12	12	3/4"	A-26
#37	REFRIG. DISPLAY CASE - FEDERAL INDUSTRIES #CGHIS-1		X	12.0	1.44		120	60	1	5-15R		15	1	2 #12	12	3/4"	A-30

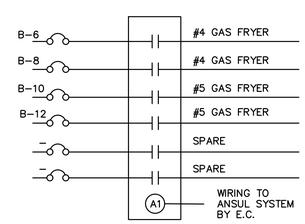

EC TO PROVIDE SIX POLE CONTACTOR AND WIRING TO ANSUL SYSTEM TO SHUTDOWN CIRCUITS NOTED UPON ACTIVATION OF ANSUL SYSTEM. EC TO VERIFY CONTROL COIL VOLTAGE WITH HOOD SYSTEM SUPPLIER

2 ANSUL CONTACTOR DETAIL

Scale: 1/4" = 1'-0"

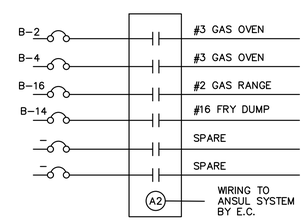

EC TO PROVIDE SIX POLE CONTACTOR AND WIRING TO ANSUL SYSTEM TO SHUTDOWN CIRCUITS NOTED UPON ACTIVATION OF ANSUL SYSTEM. EC TO VERIFY CONTROL COIL VOLTAGE WITH HOOD SYSTEM SUPPLIER

3 ANSUL CONTACTOR DETAIL

Scale: 1/4" = 1'-0"

GENERAL NOTES:

1. EXACT LOCATION, CUT-OUTS AND MOUNTING HEIGHTS FOR WIRING DEVICES IN CASEWORK SHALL BE COORDINATED WITH OWNER'S REPRESENTATIVE PRIOR TO ROUGH-IN.
2. VERIFY EXACT LOCATIONS OF ALL MILLWORK POWER AND DATA LOCATIONS IN FIELD WITH MILLWORK VENDOR.
3. VERIFY HEIGHTS OF RECEPTACLES SERVING SERVING KITCHEN/TELECOM EQUIPMENT OR WHERE LOCATED AROUND MILLWORK.
4. THE ELECTRICAL CONTRACTOR SHALL VISIT THE PROJECT SITE PRIOR TO BID TO FAMILIARIZE THEMSELVES AND VERIFY EXISTING CONDITIONS. THE ELECTRICAL CONTRACTOR SHALL NOTIFY THE TENANT'S REPRESENTATIVE OF ANY DIFFERENCES PRIOR TO BIDDING. NO EXTRAS OR CHANGE ORDERS SHALL BE GIVEN FOR CONTRACTOR'S FAILURE TO VERIFY SITE CONDITIONS PRIOR TO BIDDING.
5. VERIFY THE VOLTAGE/PHASE/AMPERAGE NAMEPLATE INFORMATION OF ALL EQUIPMENT DELIVERED TO THE SITE PRIOR TO CONNECTION. NOTIFY THE OWNER'S REPRESENTATIVE OF ANY DIFFERENCES BETWEEN THE PLANS AND EQUIPMENT DELIVERED PRIOR TO PERFORMANCE OF ANY WORK.

Oculus Inc.
1 S. Memorial Dr., Suite 1500
St. Louis, MO 63102
314.367.6100
www.oculusinc.com

CASE Engineering Inc.
796 Meriac Court
St. Louis, MO 63026
T 636.349.1600
F 636.349.1730
CERTIFICATE OF AUTHORITY NO. 4254-11

NINO'S Southern Sides

#	Description	Date

WISCONSIN MATTHEW R. CASE E-49681 ST. LOUIS, MO PROFESSIONAL ENGINEER

12/11/2024

These drawings/specifications are the property of Oculus Inc. They are furnished as contract documents only. The seal(s) and signature(s) apply only to the document to which they are affixed, and expressly disclaim any responsibility for all other plans, specifications, estimates, reports or other documents or instruments relating to or intended to be used for any part or parts of the architectural or engineering project. Additionally these drawings and seal(s) shall in no way convey or imply any type of warranty or certification relating to the performance of products and materials beyond those provided by their respective manufacturer.
© 2024 Oculus Inc.

- ISSUED FOR PERMIT

Client Approval

Project #	68423-WI01
Issue Date	12/11/2024
Scale	AS INDICATED
Drawn by	
Checked by	

E201

TI TEMPLATE V1.0
10-11-2011

PANEL BOARD A

SURFACE MOUNTED RATING 10,000 AIC RATED

120/208 VOLTS 3 PHASE 4 WIRE 400 AMP. BUS

CIRCUIT BREAKER TYPE 400A MLO FED FROM METER

CKT. NO.	EQUIP. NO.	TRIP AMP	NO. POLE	BRK. OPT.	LOAD SERVED	LOAD– V. A. A∅	B∅	C∅	LOAD SERVED	BRK. OPT.	NO. POLE	TRIP AMP	EQUIP. NO.	CKT. NO.
1	#14	70	3		DISHWASHER	5880	5892		PANEL 'B' SUB-FEED		3	100		2
3							5880	6746						4
5								5880						6
7	#17	30	3		SOFT SERVE MACHINE	3000	948		REACH-IN FRIDGE	GFCI	1	20	#7	8
9							3000	948	REACH-IN FRIDGE	GFCI	1	20	#7	10
11								3000	REACH-IN FRIDGE	GFCI	1	20	#9	12
13	#9	20	1	GFCI	REACH-IN FRIDGE	948	2400		HOT FOOD WELL	GFCI	1	30	#12	14
15	#19	20	1	GFCI	HEATED CABINETS		1920	1620	ICE MACHINE	GFCI	1	20	#20	16
17	#19	20	1	GFCI	HEATED CABINETS			1920	COFFEE BREWER	GFCI	1	15	#22	18
19	#23	15	1	GFCI	DRINK DISPENSER	720	600		P.O.S. REGISTER	GFCI	1	20	#25	20
21	#31	15	1	GFCI	COLD FOOD TABLE		612	600	P.O.S. REGISTER	GFCI	1	20	#25	22
23	#12.1	15	1	GFCI	HOT FOOD WELL			960	REFRIGERATED CASE	GFCI	1	15	#15	24
25		20	1	GFCI	DIGITAL MENUBOARDS	1000	346		REFRIG. MERCHANDISER	GFCI	1	15	#36	26
27		30	2		SPARE		--		SPARE		1	20		28
29							--	--	REFRIG. DISPLAY CASE	GFCI	1	15	#37	30
31		20	1		SPARE	--	1140		MAU-1		3	15		32
33		20	1		SPARE		--	1140	9.5A MCA					34
35		20	1		DUCT SMOKE DETECTORS			200	1140					36
37		60	3		EXISTING RTU-2	6144	5508		EXISTING RTU-1		3	50		38
39							6144	5508						40
41								6144						42
						34526	34118	35054	TOTAL VA PER PHASE					
						103698			TOTAL VA					

LOAD DESCRIPTION	DEMAND FACTOR D.F.	VOLT – AMPS CONNECTED	DEMAND
LIGHTING	1.25	6110	7638
RECEPTACLES	N.E.C. 10K+50% REMAINING	2250	2250
MOTORS	N.E.C. 25%	0	0
KITCHEN EQUIPMENT	N.E.C. 65%	35078	22801
REFRIGERATION/MISC. EQUIP	1.00	18428	18428
WATER HEATER	1.00	0	0
HVAC EQUIPMENT	1.00	41832	41832
	TOTAL=	103698	92948

PANELBOARD LOAD = V.A.92948
FULL LOAD AMPS = A. 258

L/O–PROVIDE LOCK–ON DEVICE
C/P–CIRCUIT VIA CONTROL PANEL

Breaker Options:

AS	Powerlink AS Breaker
LO	Handle lock–on device
ST	Shunt Trip Type
AUX	Auxiliary Contacts
PA	Handle Padlock Attachment
GFCI	Ground Fault Circuit Interrupter
HACR	Heating, A/C & Refrigeration
SF	Subfeed
AFCI	Arc Fault Circuit Interrupter

PANEL BOARD B

SURFACE MOUNTED RATING 22,000 AIC RATED

120/208 VOLTS 3 PHASE 4 WIRE 100 AMP. BUS

CIRCUIT BREAKER TYPE 100A MCB FED FROM EXISTING PANEL 'A'

CKT. NO.	EQUIP. NO.	TRIP AMP	NO. POLE	BRK. OPT.	LOAD SERVED	LOAD– V. A. A∅	B∅	C∅	LOAD SERVED	BRK. OPT.	NO. POLE	TRIP AMP	EQUIP. NO.	CKT. NO.
1		20	1		EXISTING LTG CIRCUIT	800	480		GAS OVEN	GFCI	1	15	#3	2
3		20	1		EXISTING LTG CIRCUIT		800	480	GAS OVEN	GFCI	1	15	#3	4
5		20	1		EXISTING LTG CIRCUIT			800	GAS FRYER	GFCI	1	15	#4	6
7		20	1		KITCHEN LIGHTING	550	600	600	GAS FRYER	GFCI	1	15	#4	8
9		20	1		SERVICE COUNTER LTG		550	600	GAS FRYER	GFCI	1	15	#5	10
11		20	1		PRIVATE DINING ROOM			210	GAS FRYER	GFCI	1	15	#5	12
13	#6	15	1	GFCI	WORKTOP FRIDGE	348	756	800	FRY DUMP	GFCI	1	15	#16	14
15	#6	15	1	GFCI	WORKTOP FRIDGE		348	180	GAS RANGE	GFCI	1	15	#2	16
17	#8	15	1	GFCI	WORKTOP FRIDGE			204	WORKTOP FRIDGE	GFCI	1	15	#8	18
19		20	1		SPARE	--	456	204	FOOD WARMERS	GFCI	1	15	#11	20
21	#10	15	1	GFCI	WORKTOP FRIDGE		396	540	HEATED CUTTING BOARD	GFCI	1	15	#18	22
23		20	1		DATA RACK			500	WATER HEATER/RECIRC.	GFCI	1	20		24
25		20	1		MANAGER'S DESK	500	250		HOOD LIGHTS/CONTROLS		1	20		26
27		20	1		SHOW WINDOW REC.		1200	500	HOOD ANSUL SYSTEM		1	20		28
29		20	1		STOREFRONT SIGN			1200	TIMECLOCK		1	20		30
31		20	1		SPARE	--	--		SPARE		1	20		32
33		20	1		SPARE		--	--	SPARE		1	20		34
35		20	1		SPARE			--	SPARE		1	20		36
37		15	3		KEF-1	576	576		KEF-2		3	15		38
39							576	576						40
41								576						42
						5892	6746	5970	TOTAL VA PER PHASE					
						18608			TOTAL VA					

LOAD DESCRIPTION	DEMAND FACTOR D.F.	VOLT – AMPS CONNECTED	DEMAND
LIGHTING	1.25	6110	7638
RECEPTACLES	N.E.C. 10K+50% REMAINING	1250	1250
MOTORS	N.E.C. 25%	0	0
KITCHEN EQUIPMENT	N.E.C. 65%	5292	3440
REFRIGERATION/MISC. EQUIP	1.00	2500	2500
WATER HEATER	1.00	0	0
HVAC EQUIPMENT	1.00	3456	3456
	TOTAL=	18608	18283

PANELBOARD LOAD = V.A.18283
FULL LOAD AMPS = A. 51

L/O–PROVIDE LOCK–ON DEVICE
C/P–CIRCUIT VIA CONTROL PANEL

Breaker Options:

AS	Powerlink AS Breaker
LO	Handle lock–on device
ST	Shunt Trip Type
AUX	Auxiliary Contacts
PA	Handle Padlock Attachment
GFCI	Ground Fault Circuit Interrupter
HACR	Heating, A/C & Refrigeration
SF	Subfeed
AFCI	Arc Fault Circuit Interrupter

PANEL NOTES:

1. EC TO PROVIDE HANDLE TIE ON ALL MULTIWIRE BRANCH CIRCUITS PER N.E.C. 210.4(B).
2. ALL SPARE CIRCUIT BREAKERS AND DISCONNECT SWITCHES SHALL BE LEFT IN THE OFF POSITION.
3. 'GFCI' NOTATIONS IN PANELBOARD SCHEDULE ARE USED TO IDENTIFY WHAT CIRCUIT REQUIRES GFI PROTECTION. WHERE A GFCI BREAKER IS UNABLE TO BE PROVIDED OR INSTALLED, PROTECTION SHALL BE PROVIDED EITHER AT THE CONNECTED LOAD VIA A GFCI RECEPTACLE (WHERE READILY ACCESSIBLE) OR VIA A DEAD–FRONT GFCI DEVICE LOCATED IN A READILY ACCESSIBLE LOCATION.
4. INFORMATION REGARDING THE EXISTING UTILITY SERVICE TO THE BUILDING COULD NOT BE FULLY DETERMINED AT THE TIME OF DESIGN. THE E.C. SHALL FIELD VERIFY CONDITIONS PRIOR TO ANY BID. IF THE VOLTAGE AND AMPERAGE DOES NOT MATCH THAT INDICATED, NOTIFY THE ARCHITECT OF RECORD, ENGINEER OF RECORD PRIOR TO BID.
5. NEW BREAKERS IN EXISTING PANELS SHALL BE OF THE SAME MANUFACTURER OF THE EXISTING PANELBOARD, BE OF A LETTER TYPE LISTED BY THE MANUFACTURER TO MAINTAIN THE 'UL' LISTING OF THE EXISTING PANELBOARD, AND SHALL MEET OR EXCEED THE FAULT CURRENT RATING OF EXISTING BREAKERS IN THE PANELBOARD. SEE KEY NOTE #3 BELOW FOR ADDITIONAL INFORMATION.
6. TEXT IN THE PANEL SCHEDULE INDICATED IN A LIGHT COLORED OR 'GRAY' FONT IS WHERE EXISTING WORK IS INTENDED TO REMAIN IN PLACE, AND AN EXISTING CIRCUIT OR BREAKER IS TO BE MAINTAINED IN THE SAME POSITION. TEXT IN DARK FONT IS WHERE NEW WORK IS TO BE PROVIDED, AND A NEW CIRCUIT OR BREAKER IS TO BE PROVIDED.

ELECTRICAL SYMBOLS

SYMBOL	DESCRIPTION
GC	GENERAL CONTRACTOR
EC	ELECTRICAL CONTRACTOR
MC	MECHANICAL CONTRACTOR
WP	WEATHERPROOF
NL	NIGHT LIGHT (CONNECT TO UNSWITCHED LEG OF CIRCUIT NOTED)
ST	SHUNT TRIP CIRCUIT
AFF	ABOVE FINISHED FLOOR
UNO	UNLESS NOTED OTHERWISE
TTB	TELEPHONE TERMINAL BOARD
PROVIDE	FURNISH AND INSTALL COMPLETE
(J)	JUNCTION BOX, MOUNTING HEIGHT
	20A, 1P, 125V, GROUNDING TYPE DUPLEX RECEPTACLE (+18" AFF UNO)
	20A, 1P, 125V, GFCI TYPE DUPLEX RECEPTACLE (+18" AFF UNO)
	20A, 1P, 125V, GROUNDING TYPE DOUBLE DUPLEX RECEPTACLE
	SPECIAL NEMA RECEPTACLE – REFER TO DRAWING NOTES
	CEILING MOUNTED EXHAUST FAN
30/NF/3	DISCONNECT SWITCH: 30 AMP, NON–FUSED, 3 POLE
$	LIGHT SWITCH
$3	LIGHT SWITCH (3 WAY)
$4	LIGHT SWITCH (4 WAY)
$OS	WALL MOUNTED OCCUPANCY SENSOR SWITCH AT 3'–6" AFF TO CENTERLINE (WATT STOPPER #WS250–WH)
OS	CEILING MOUNTED OCCUPANCY SENSOR SWITCH (WATT STOPPER #DT–355)
DS	DAYLIGHTING SENSOR
	DIMMER SWITCH
▶	COMMUNICATIONS JUNCTION BOX FOR DATA/COMM. DEVICE PLATE. EC TO ROUTE 3/4" CONDUIT WITH PULL STRING TO 6" ABOVE ACCESSIBLE CEILING AND BEND AT 90° TOWARDS TTB. EC TO PROVIDE PLASTIC BUSHING ON END OF CONDUIT.
+12"	12" ABOVE FINISHED FLOOR TO CENTERLINE
F 5a	LIGHTING FIXTURE SWITCHING DESIGNATION – LETTER 'F' INDICATES THE FIXTURE TYPE (SEE FIXTURE SCHEDULE) THE NUMBER '5' INDICATES THE CIRCUIT IN THE PANEL NOTED AND THE LOWER CASE LETTER 'a' INDICATES THE SWITCH LEG TO CONNECT THE FIXTURE TO.
CL2	CURRENT LIMITING DEVICE. THE NUMBER DESIGNATES THE DESIGN AMPERAGE RATING AS DESIGNATED BY THE TRACK MANUFACTURER.
	ELECTRICAL PANELBOARD – INSTALLED SUCH THAT BOTTOM OF ENCLOSURE IS MIN. 24" FROM THE FLOOR, AND THAT TOP OF PANELBOARD DOES NOT EXCEED 84". SEE PANEL SCHEDULE DETAILS FOR AMPERAGE, VOLTAGE AND CIRCUITS.
M	MOTORIZED DAMPERS AS INDICATED BY MECHANICAL DRAWINGS.
SD	DUCT MOUNTED SMOKE DETECTION DEVICE AS INDICATED BY MECHANICAL DRAWINGS

NOTES:
1. ALL SWITCHES, COVER PLATES, RECEPTACLES SHALL BE 'WHITE' OR AS DIRECTED BY OWNER IN CUSTOMER FACING AREAS. COVER PLATES SHALL BE STAINLESS STEEL IN KITCHEN OR BAR AREAS.
2. TELEPHONE SERVICE SHALL BE THREE (3) LINE SERVICE AS FOLLOWS:
LINE 1 SHALL BE PRIMARY TELEPHONE LINE.
LINE 2 SHALL BE ROLLOVER TELEPHONE LINE & FAX LINE.
LINE 3 SHALL BE FAX & DATA LINE.
3. SIGNAGE INSTALLATION:
THE ELECTRICAL CONTRACTOR SHALL PROVIDE THE MOUNTING OF THE TRANSFORMERS AND FINAL ELECTRICAL CONNECTION OF THE OWNER PROVIDED EXTERIOR BUILDING AND INTERIOR SIGNAGE. ALL SIGNS SHALL BE ON INDIVIDUAL DEDICATED CIRCUITS W/DEDICATED GROUNDS.

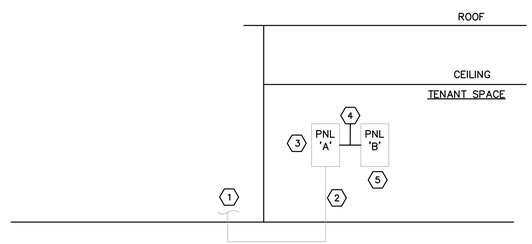

2 ONE LINE DIAGRAM
Scale: NTS

KEYED NOTES

1. EXISTING SERVICE ENTRANCE EQUIPMENT TO REMAIN. INFORMATION REGARDING THE SERVICE ENTRANCE, METERING, ANY LANDLORD EQUIPMENT, LOCATION OF EQUIPMENT, AND SERVICE AMPERAGE WAS UNKNOWN AT THE TIME OF DESIGN. VERIFY EXISTING CONDITIONS AND COORDINATE WORK WITH LANDLORD AND UTILITY COMPANY.
2. ELECTRICAL FEEDERS SERVING TENANT ELECTRICAL PANEL ARE EXISTING TO REMAIN.
3. EXISTING PANELBOARD 'A' TO REMAIN, PROVIDE ANY ELECTRICAL REPAIRS AND REPLACEMENTS REQUIRED. E.C. SHALL VERIFY AVAILABLE FAULT CURRENT PRIOR TO ANY WORK AS PART OF POWER SYSTEMS STUDY. IF THE AVAILABLE FAULT CURRENT EXCEEDS 10KAIC AT THE PANELBOARD, E.C. SHALL PROVIDE NEW BREAKERS RATED TO WITHSTAND THE AVAILABLE FAULT CURRENT. IF AVAILABLE FAULT CURRENT EXCEEDS 22KAIC AT THE PANELBOARD, E.C. SHALL PROVIDE A SERIES RATED SYSTEM BETWEEN THE PANELBOARD AND THE UPSTREAM OVERCURRENT PROTECTIVE DEVICE, EITHER BY COMBINATION OF BREAKERS OR FUSES, TO SERIES RATE DOWN TO 22KAIC.
4. E.C. SHALL INTERCEPT EXISTING CONDUCTOR AND EXTEND TO NEW PANELBOARD 'B'. NEW CONDUCTORS AND CONDUIT SHALL BE EQUAL TO EXISTING.
5. PROVIDE NEW ELECTRICAL PANELBOARD 'B' IN PLACE OF EXISTING. PROVIDE NEW CODNUIT AND WIRE AS REQUIRED TO EXTEND AND RE–CONNECT EXISTING LIGHTING CIRCUITS TO NEW PANEL 'B'.

Oculus Inc.
1 S. Memorial Dr., Suite 1500
St. Louis, MO 63102
314.367.6100
www.oculusinc.com

CASE Engineering Inc.
796 Meriac Court
St. Louis, MO 63026
T 636.349.1600
F 636.349.1730
CERTIFICATE OF AUTHORITY NO. 4354-11

NINO'S Southern Sides

#	Description	Date

WISCONSIN MATTHEW R. CASE E-49681 ST. LOUIS MO PROFESSIONAL ENGINEER
12/11/2024

These drawings/specifications are the property of Oculus Inc. They are furnished as contract documents only. The seal(s) and signature(s) apply only to the document to which they are affixed, and expressly disclaim any responsibility for all other plans, specifications, estimates, reports or other documents or instruments relating to or intended to be used for any part or parts of the architectural or engineering project. Additionally these drawings and seal(s) shall in no way convey or imply any type of warranty or certification relating to the performance of products and materials beyond those provided by their respective manufacturer.
© 2024 Oculus Inc.

- ISSUED FOR PERMIT

Client Approval

Project #	68423-WI01
Issue Date	12/11/2024
Scale	AS INDICATED
Drawn by	
Checked by	

E301

TI TEMPLATE V1.0
10-11-2011

MECHANICAL SPECIFICATIONS

1. GENERAL
   - A. THE GENERAL CONDITIONS OF THE GENERAL SPECIFICATIONS, AND ALL APPLICABLE INSTRUCTIONS TO BIDDERS SHALL BE PART OF THESE SPECIFICATIONS.
   - B. "PROVIDE" AS USED HEREIN MEANS TO FURNISH AND INSTALL COMPLETE.
   - C. "FURNISH" AS USED HEREIN MEANS TO PURCHASE AND DELIVER TO THE PROJECT SITE IN UNDAMAGED CONDITION. WHERE APPLICABLE, SUBMIT FOR REVIEW AND APPROVAL AND COORDINATE WITH THE CONTRACT DOCUMENTS.
   - D. "INSTALL" AS USED HEREIN MEANS TO STORE AND PROTECT FROM DAMAGE, INSTALL PER MANUFACTURER'S WRITTEN INSTRUCTIONS, AND MAKE ALL CONNECTIONS COMPLETE.
   - E. THE TERM "CONTRACTOR" AS USED HEREIN MEANS ANY CONTRACTOR OR SUBCONTRACTOR CONTRACTED TO PERFORM WORK INCLUDED IN AND DEFINED BY THIS SECTION.
   - F. MECHANICAL WORK SHALL BE PROVIDED IN STRICT COMPLIANCE WITH THE WISCONSIN MECHANICAL CODE 2015, AND ALL APPLICABLE LOCAL ORDINANCES, STATE LAWS AND FEDERAL LAWS.

2. PRIOR TO BIDDING:
   - A. THOROUGHLY REVIEW THE BID INSTRUCTIONS INCLUDING ALL CIVIL, ARCHITECTURAL, STRUCTURAL, AND MEP CONSTRUCTION DOCUMENTS. OBTAIN AND THOROUGHLY EXAMINE THE MANUFACTURERS' WRITTEN INSTALLATION INSTRUCTIONS, DETAILS, AND REQUIREMENTS FOR THE SCHEDULED AND SPECIFIED EQUIPMENT AND MATERIALS. FOR AMBIGUOUS, CONTRADICTORY, OR CONFLICTING ITEMS WITHIN THE CONSTRUCTION DOCUMENTS, THE CONTRACTOR SHALL REQUEST CLARIFICATION IN A WRITTEN "REQUEST FOR INFORMATION" (RFI), AT LEAST FIVE (5) WORKING DAYS PRIOR TO BID DATE. RFI-RELATED WORK NOT CLARIFIED PRIOR TO BID SHALL BE PROVIDED PER THE ARCHITECT (ENGINEER) IN STRICT ACCORDANCE WITH THE MOST STRINGENT MATERIALS, EQUIPMENT, AND SCOPE OF WORK.
   - B. IF THE CONTRACTOR BELIEVES THE DRAWINGS AND SPECIFICATIONS CONFLICT WITH CODE REQUIREMENTS, IMMEDIATELY NOTIFY THE ARCHITECT (ENGINEER) IN WRITING.
   - C. NO ALLOWANCES WILL BE MADE DUE TO CONTRACTOR'S UNFAMILIARITY WITH THE CONSTRUCTION DOCUMENTS OR FOR THE FAILURE OF THE CONTRACTOR TO OBTAIN CLARIFICATIONS PRIOR TO BID.
   - D. VISIT THE JOB SITE AND THOROUGHLY INVESTIGATE CONDITIONS. THE LACK OF SPECIFIC INFORMATION ON THE DRAWINGS SHALL NOT RELIEVE THE CONTRACTOR OF ANY RESPONSIBILITY.
   - E. REFER TO APPLICABLE CODES CITED IN CONSTRUCTION DOCUMENTS, EXAMINE GOVERNING STATE AND LOCAL CODES, AND LOCAL REGULATIONS AND ORDINANCES, AND PROVIDE ALL EQUIPMENT AND INSTALLATION IN STRICT ACCORDANCE WITH SAME.
   - F. REFER TO CONSTRUCTION DOCUMENTS FOR SCHEDULED AND SPECIFIED MATERIALS AND EQUIPMENT. INSTALLATION SHALL BE IN STRICT ACCORDANCE WITH MANUFACTURERS' WRITTEN INSTRUCTIONS AND DETAILS.
   - G. ALL WORK SHALL BE COMPLETED IN STRICT ACCORDANCE WITH THE LANDLORD'S CONSTRUCTION CRITERIA AND TENANT/LANDLORD AGREEMENT. THIS CONTRACTOR SHALL EXAMINE THE LANDLORD CRITERIA AND TENANT/LANDLORD AGREEMENT AND THEY SHALL BE PART OF THESE SPECIFICATIONS. NO ALLOWANCES WILL BE MADE DUE TO CONTRACTOR'S UNFAMILIARITY WITH THESE DOCUMENTS.

3. BIDDING
   - A. SUBMISSION OF A BID ACKNOWLEDGES THAT THE CONTRACTOR HAS REVIEWED THE BID INSTRUCTIONS, HAS VISITED THE SITE, EXAMINED ALL CONSTRUCTION DOCUMENTS, AND AGREES TO ALL ITEMS AND CONDITIONS WITHIN THE CONSTRUCTION DOCUMENTS. THE CONTRACTOR'S BID SHALL INCLUDE ALL MECHANICAL WORK IN THE CONSTRUCTION DOCUMENTS, INCLUDING MECHANICAL WORK RELATED TO EQUIPMENT FURNISHED/PROVIDED BY OTHERS.

4. PERMITS
   - A. SECURE AND PAY FOR ALL PERMITS, LICENSES, AND INSPECTIONS REQUIRED BY THE AHJ FOR THIS WORK.

5. SUBSTITUTIONS
   - A. MANUFACTURERS' EQUIPMENT, APPLIANCES, AND MATERIALS SCHEDULED, NOTED, AND SPECIFIED IN THE CONSTRUCTION DOCUMENTS ARE THE DESIGN STANDARD. NO SUBSTITUTIONS WILL BE ALLOWED WITHOUT PRIOR WRITTEN APPROVAL BY THE ARCHITECT OR ENGINEER. IN BIDDING, CONTRACTOR SHALL NOT ASSUME ACCEPTANCE OF SUBSTITUTIONS. CONTRACTOR MUST STATE IN SUBSTITUTION REQUEST: "PROPOSED SUBSTITUTIONS ARE OF EQUAL OR HIGHER QUALITY, EFFICIENCY AND DEPENDABILITY COMPARED TO THE SPECIFIED EQUIPMENT AND MATERIAL. CONTRACTOR ASSUMES FULL RESPONSIBILITY FOR ADDITIONAL ENGINEERING COSTS AND COSTS TO OTHER CONTRACTORS DUE TO SUBSTITUTIONS." IF DEEMED NECESSARY BY THE ARCHITECT OR ENGINEER, SUBSTITUTIONS WHICH ARE NOT APPROVED OR NOT EQUAL TO DESIGN STANDARD SHALL BE REMOVED AND THE SCHEDULED, NOTED, AND SPECIFIED EQUIPMENT AND MATERIALS SHALL BE INSTALLED AT CONTRACTOR'S EXPENSE. SUBMITTING CONTRACTOR ASSUMES FULL RESPONSIBILITY FOR ADDITIONAL ENGINEERING COSTS AND COSTS TO OTHER CONTRACTORS DUE TO SUBSTITUTIONS.

6. UTILITIES
   - A. THE UTILITY INFORMATION NOTED AND SPECIFIED IN THE CONSTRUCTION DOCUMENTS ARE THE DESIGN STANDARD AND AS ACCURATE AS COULD BE SECURED BUT IS NOT GUARANTEED. PRIOR TO INSTALLING ANY UTILITY-RELATED WORK, THIS CONTRACTOR SHALL CONTACT THE LOCAL UTILITY - IN WRITING - TO COORDINATE AND CONFIRM THE SERVICE AND CONNECTION REQUIREMENTS WITH THE CONSTRUCTION DOCUMENTS. THE CONTRACTOR SHALL REQUEST THE UTILITY SERVICE AND CONNECTION IN AMPLE TIME TO MEET THE CONSTRUCTION SCHEDULE. ANY DISCREPANCIES BETWEEN THE CONSTRUCTION DOCUMENTS AND THE ACTUAL UTILITY SERVICE CONNECTION SHALL BE SUBMITTED WITHOUT DELAY TO THE ARCHITECT (ENGINEER) IN WRITING, AS A "REQUEST FOR INFORMATION" (RFI). RFI-SUBJECT UTILITY WORK MUST BE RESOLVED WITH THE ARCHITECT (ENGINEER) PRIOR TO INSTALLATION. THE CONTRACTOR ASSUMES FULL RESPONSIBILITY AND ALL COSTS FOR WORK NOT COORDINATED WITH THE UTILITY AND NOT SUBMITTED TO THE ARCHITECT (ENGINEER) FOR RESOLUTION.

7. SCHEDULING
   - A. ALL PERFORMANCE OF CONSTRUCTION SHALL BE AS REQUIRED BY THE PACE OF THE GENERAL CONSTRUCTION, AS SCHEDULED BY THE GC. PROVIDE COMPLETE INFORMATION AND FULL COOPERATION WITH OTHER CONTRACTORS AND TRADES, AS REQUIRED FOR THE TIMELY COMPLETION AND COORDINATION OF THE COMPLETE PROJECT.
   - B. PROVIDE ALL TESTS AND INSPECTIONS REQUIRED BY AHJ.
   - C. PROVIDE A SIGNED CERTIFICATE OF INSPECTION AT THE PROJECT COMPLETION.

8. SCOPE
   - A. PROVIDE PERMIT(S), INSPECTIONS, FINAL CERTIFICATE(S) OF INSPECTION BY AHJ, PERMIT AND INSPECTION FEES, AND ALL MATERIALS, EQUIPMENT, RIGGING, AND LABOR NECESSARY FOR A COMPLETE AND FULLY OPERATING HVAC SYSTEM.
   - B. STRUCTURAL ENGINEERING FOR THE SUPPORT AND MOUNTING OF THE SCHEDULED AND SPECIFIED MATERIALS AND EQUIPMENT IS THE RESPONSIBILITY OF OTHERS . THE MECHANICAL CONSTRUCTION DOCUMENTS DO NOT INCLUDE STRUCTURAL ENGINEERING FOR SUPPORT OF MECHANICAL EQUIPMENT, APPLIANCES, OR SYSTEMS.
   - C. THROUGHOUT CONSTRUCTION, THIS CONTRACTOR'S WORK SHALL INCLUDE ONGOING COORDINATION OF THIS WORK WITH THE CONSTRUCTION DOCUMENTS, THE WORK OF ALL OTHER TRADES, AND WITH UTILITY SERVICE(S) AND UTILITY CONNECTION(S). FOR AMBIGUOUS, CONTRADICTORY, OR CONFLICTING ITEMS WITHIN THE CONSTRUCTION DOCUMENTS, INCLUDING BUT NOT LIMITED TO THE ACTUAL UTILITY SERVICE AND CONNECTION REQUIREMENTS, THE CONTRACTOR SHALL REQUEST CLARIFICATION IN A WRITTEN "REQUEST FOR INFORMATION" (RFI). RFI SHALL BE ISSUED WITHOUT DELAY AND PRIOR TO PROCEEDING WITH ANY RFI-SUBJECT WORK. RFI NOT CLARIFIED PRIOR TO BID SHALL BE PROVIDED PER THE ARCHITECT (ENGINEER) IN STRICT ACCORDANCE WITH THE MOST STRINGENT MATERIALS, EQUIPMENT, AND SCOPE OF WORK, AT NO ADDITIONAL COST TO THE OWNER.
   - D. PROVIDE HOISTING FOR ALL MATERIALS AND EQUIPMENT FURNISHED AND/OR INSTALLED, IN ACCORDANCE WITH ALL CITY, STATE AND FEDERAL RULES AND REGULATIONS.
   - E. INSTALL ALL WORK AND EQUIPMENT RIGID, DEAD LEVEL, PLUMB, AND TRUE-TO-LINE. UNLESS NOTED OTHERWISE, SUPPORT AND MOUNTING OF EQUIPMENT, DUCT, PIPING, ETC., ARE THIS CONTRACTOR'S MEANS AND METHODS. THE CONTRACTOR SHALL UNDERSTAND THE SPECIFIED AND SCHEDULED EQUIPMENT AND MATERIALS AND MEANS AND METHODS OF INSTALLATION. THIS CONTRACTOR SHALL PROVIDE ALL ACCESSORIES REQUIRED FOR PROPER SUPPORT WHETHER SHOWN ON THE DRAWINGS OR NOT. IF SUPPORTS ARE REQUIRED, CONTRACTOR SHALL SUBMIT DRAWINGS TO THE ARCHITECT FOR APPROVAL.
   - F. PROVIDE ACCESSORY MOUNTING HARDWARE INCLUDING BUT NOT LIMITED TO STRUCTURAL STEEL, STRUT SYSTEMS, ALL THREAD RODS, AND BRACES, AS REQUIRED TO MOUNT EQUIPMENT. PROVIDE STEEL SHAPES AND FRAMES TO SUPPORT EQUIPMENT WHERE NEEDED. ALL SYSTEMS SHALL BE SUPPORTED INDEPENDENT OF AND ISOLATED FROM EQUIPMENT VIBRATION.
   - G. PRODUCTS SHALL BE INSTALLED IN ACCORDANCE WITH MANUFACTURERS' PRINTED INSTALLATION AND MAINTENANCE LITERATURE. COMPONENTS REQUIRING PERIODIC MAINTENANCE OR ADJUSTMENTS SHALL BE INSTALLED AS TO PERMIT ACCESS WITHOUT DAMAGE TO STRUCTURE, FINISHES, OR OTHER EQUIPMENT.
   - H. PROVIDE ALL LABOR, EQUIPMENT AND MATERIAL REQUIRED FOR THE REINSTALLATION AND RE-SUPPORT OF EXISTING SERVICES (DUCTWORK, ELECTRICAL CONDUIT, PIPING, EXISTING EQUIPMENT, ETC.) DISTURBED BY THE INSTALLATION OF NEW WORK UNDER THIS CONTRACT, INCLUDING THE WORK OF OTHER TRADES.
   - I. DEMOLITION: REFER TO THE ARCHITECTURAL DRAWINGS FOR THE GENERAL SCOPE OF DEMOLITION. THIS CONTRACTOR SHALL DISCONNECT AND CAREFULLY REMOVE ALL EXISTING HVAC EQUIPMENT LOCATED IN DEMOLISHED AREAS INCLUDING ROOF, PLENUMS, CEILINGS, WALLS, AND FLOORS. U.N.O., DISCONNECT AND REMOVE EXISTING HVAC SYSTEMS COMPLETE, INCLUDING EQUIPMENT, CURBS, DUCTS, INSULATION, AIR DEVICES, AND PIPING LOCATED IN THESE AREAS. ALL HVAC SYSTEM COMPONENTS INCLUDING AIR TERMINAL UNITS, FANS, MOTORS, CONTROL DEVICES AND SENSORS, DAMPERS, ACTUATORS, HANGERS, RESTRAINTS, MOUNTING HARDWARE, ETC., SHALL BE REMOVED AND LEGALLY DISPOSED OF BY THIS CONTRACTOR.
   - J. UNLESS NOTED OTHERWISE, ABANDONMENT IN PLACE (AIP) IS NOT ACCEPTABLE. UNUSED EQUIPMENT, DUCT, PIPING, AND OTHER COMPONENTS WITHIN OR SERVING THIS SPACE MUST BE COMPLETELY REMOVED TO POINT OF ORIGIN. ENDS OF SYSTEMS BEYOND GENERAL SCOPE OF DEMOLITION MAY BE ABANDONED ONLY WITH WRITTEN APPROVAL OF ARCHITECT (ENGINEER). WHERE THESE ABANDONED ENDS TERMINATE, TRIM CLEANLY AND PROPERLY CAP OR SEAL IN AN APPROVED MANNER, LEAVING TERMINATION SAFE AND SECURE BEHIND NEW FINISHES. MAINTAIN SYSTEM CONTINUITY TO HVAC SYSTEMS SERVING AREAS BEYOND GENERAL DEMOLITION, AS NEEDED. THIS INCLUDES BUT IS NOT LIMITED TO REMOVAL, MODIFICATION AND/OR REINSTALLATION OF EQUIPMENT, AS NEEDED. COMPLETION OF THIS PROJECT SHALL INCLUDE RETURNING THESE ADJACENT AREAS TO FULLY FUNCTIONING OPERATION.
   - K. CONTRACTOR SHALL PROVIDE DAILY CLEAN-UP, REMOVAL AND LEGAL DISPOSAL OF ALL RUBBISH GENERATED BY THIS WORK.
   - L. AS-BUILT DRAWINGS: DURING CONSTRUCTION, AS WORK PROCEEDS, MAINTAIN AS-BUILT MARK-UPS OF ACTUAL INSTALLATION. AT CONSTRUCTION COMPLETION AND PRIOR TO TURNOVER TO OWNER , PROVIDE FINAL MARK-UPS IN PDF AND DWG FORMAT TO ARCHITECT AND ENGINEER.
   - M. PROVIDE FINAL CONNECTIONS TO EQUIPMENT FURNISHED/PROVIDED BY OTHERS, AS NOTED (GAS FIRED EQUIPMENT, COMMERCIAL KITCHEN EQUIPMENT, LAUNDRY EQUIPMENT, ETC.).
   - N. DO NOT ROUTE ANY PIPING OR DUCTWORK ABOVE ELECTRICAL PANELS.
   - O. UNLESS NOTED OTHERWISE, ALL DUCT AND PIPE SHALL BE RUN PARALLEL TO OR AT RIGHT ANGLES TO WALLS, BEAMS, OR COLUMNS. PIPE SHALL BE RUN AS DIRECT AS POSSIBLE - AVOID UNNECESSARY OFFSETS AND MAXIMIZE HEADROOM.
   - P. PRIOR TO ORDERING EQUIPMENT, THIS CONTRACTOR SHALL PROVIDE FINAL COORDINATION OF ELECTRICAL POWER REQUIREMENTS WITH THE ELECTRICAL CONTRACTOR.
   - Q. CONTRACTOR SHALL MAINTAIN ACTIVITIES WITHIN AREA APPROVED BY OWNER OR GC. CONTRACTOR'S ACTIVITIES SHALL NOT INTERFERE WITH THE OWNER'S OPERATIONS, EXCEPT AS APPROVED.
   - R. EXCEPT THOSE COORDINATED AND APPROVED BY THE G.C., CONTINUITY OF ALL BUILDING SERVICES AND UTILITIES SERVING BUILDING FACILITIES SHALL BE MAINTAINED UNINTERRUPTED AT NO ADDITIONAL COST. PROVIDE ALL NECESSARY CROSS CONNECTIONS AND TEMPORARY CONNECTIONS REQUIRED TO PERFORM THE CONSTRUCTION, AS DETERMINED BY THE G.C., AND NEEDED TO MAINTAIN CONTINUITY OF THE BUILDING SERVICE(S). THIS CONTRACTOR SHALL SCHEDULE WORK SUCH THAT ANY AND ALL CONNECTIONS, AND/OR REARRANGEMENT OF EXISTING EQUIPMENT, PIPING, ETC., SHALL ASSURE FULL RESUMPTION OF SERVICE(S) AT THE G.C.'S DESIGNATED TIME.

9. CODE REQUIREMENTS
   - A. ALL WORK SHALL COMPLY WITH THE CONSTRUCTION DOCUMENTS OR, AS DIRECTED BY THE ARCHITECT (ENGINEER), AND SHALL BE PERFORMED IN STRICT ACCORDANCE WITH ALL APPLICABLE CODES, ORDINANCES, AND REGULATIONS OF THE AHJ, WHETHER SO SHOWN OR NOT. CONTRACTOR SHALL BE FAMILIAR WITH PROVISIONS OF ALL APPLICABLE CODES AND SHALL ENSURE THE WORK COMPLIES WITH ALL LOCAL, STATE AND FEDERAL CODES, TRADE STANDARDS AND MANUFACTURER'S RECOMMENDATIONS. IF CONTRACTOR BELIEVES THE DRAWINGS AND/OR SPECIFICATIONS CONFLICT WITH CODE REQUIREMENTS, IMMEDIATELY NOTIFY THE G.C. IN WRITING. DO NOT INSTALL WORK NOT COMPLYING WITH CODE REQUIREMENTS. IN CASE OF CONFLICT BETWEEN THE CONSTRUCTION DOCUMENTS AND THE CODES AND ORDINANCES, THE HIGHEST STANDARD SHALL APPLY. AS A MINIMUM STANDARD, CONTRACTOR SHALL SATISFY CODE REQUIREMENTS. ALL MODIFICATIONS REQUIRED BY AHJ SHALL BE MADE BY THE CONTRACTOR AT NO ADDITIONAL COST TO THE OWNER. BEFORE COMMENCING WORK NOT SHOWN IN DOCUMENTS BUT REQUIRED TO ACHIEVE FULL COMPLIANCE WITH CODES, CONTRACTOR SHALL NOTIFY ARCHITECT (ENGINEER).

10. CUTTING & PATCHING
    - A. CORE-DRILL OR SAW-CUT EXISTING FLOORS, WALLS, ROOF, ETC., AS REQUIRED FOR EQUIPMENT, PIPE, OR DUCTWORK. PRIOR TO CUTTING, PERFORM NON-DESTRUCTIVE TESTING TO VERIFY LOCATION OF PIPING, CONDUIT, AND STRUCTURAL COMPONENTS. NOTIFY ARCHITECT (ENGINEER) OF ANY DISCREPANCIES. PATCH SURROUNDING AREAS FLUSH WITH ADJACENT SURFACE AND READY TO RECEIVE FINISH. PATCH AND REPAIR ROOF TO MATCH EXISTING ROOFING.

11. FIRE STOPPING
    - A. PROVIDE FIRE STOPPING FOR PENETRATIONS OF DUCT, PIPING, AND OTHER MECHANICAL EQUIPMENT THROUGH FIRE-RATED VERTICAL BARRIERS (WALLS AND PARTITIONS), HORIZONTAL BARRIERS (FLOOR/CEILING ASSEMBLIES), AND VERTICAL SERVICE SHAFT WALLS AND PARTITIONS. (WHERE THIS WORK IS BEING PERFORMED UNDER A GC, PRIOR TO INSTALLATION, THIS CONTRACTOR SHALL COORDINATE FIRESTOPPING WITH GC). FIRESTOP SYSTEM INSTALLATION MUST MEET REQUIREMENTS OF ASTM E 814 OR UL 1479 TESTED ASSEMBLIES THAT PROVIDE A FIRE RATING EQUAL TO OR GREATER THAN THAT OF CONSTRUCTION BEING PENETRATED. INSTALL IN STRICT ACCORDANCE WITH UL FIRE RESISTANCE DIRECTORY, AHJ, AND MANUFACTURER'S SPECIFIED REQUIREMENTS. ONLY TESTED FIRESTOP SYSTEMS BY "3M", "HILTI", OR EQUAL SHALL BE USED. REFER TO ARCHITECTURAL DRAWINGS FOR ASSEMBLY RATING.

12. MATERIALS AND WORKMANSHIP
    - A. ALL MANUFACTURED ARTICLES, MATERIALS, AND EQUIPMENT SHALL BE NEW U.N.O., FREE OF DEFECTS, AND INSTALLED IN STRICT ACCORDANCE WITH THE MANUFACTURER'S WRITTEN INSTRUCTIONS AND DETAILS, AND INDEPENDENTLY TESTED AND LABELED BY A NATIONALLY RECOGNIZED TESTING LABORATORY - UNDERWRITERS LABORATORIES (UL) OR INTERTEK (ETL). ALL LIKE MATERIALS USED SHALL BE OF THE SAME MANUFACTURE AND QUALITY U.N.O.
    - B. ALL MATERIALS WITHIN PLENUMS SHALL BE NONCOMBUSTIBLE OR SHALL HAVE A FLAME SPREAD INDEX OF NOT MORE THAN 25 AND A SMOKE DEVELOPED INDEX OF NOT MORE THAN 50 WHEN TESTED IN ACCORDANCE WITH ASTM E84 OR UL 723. ALL MATERIALS INSTALLED IN PLENUM SPACES SHALL BE LISTED AND LABELED FOR SUCH APPLICATION.
    - C. ALL WORK SHALL BE SUPERVISED BY THE INSTALLING CONTRACTOR'S COMPETENT AND SKILLED FOREMAN. ALL WORK SHALL BE PERFORMED BY COMPETENT AND SKILLED WORKERS, WITH ALL TRADE AND MANUFACTURER REQUIRED TRAINING, AND EXECUTED IN A NEAT AND WORKMANLIKE MANNER. ALL WORK SHALL BE IN STRICT ACCORDANCE WITH THE BEST QUALITY STANDARDS OF THE TRADE AND IN CONFORMANCE WITH ALL FEDERAL, STATE, AND LOCAL CODES AND STANDARDS, INCLUDING APPLICABLE OSHA REGULATIONS. PROPERLY PROTECT WORK DURING CONSTRUCTION. AT CONSTRUCTION COMPLETION, THOROUGHLY CLEAN WORK AND REMOVE ALL DEBRIS FROM THE PREMISES.

13. PROTECTION OF WORK AND PROPERTY
    - A. PROTECT ALL WORK FROM DAMAGE AND PROTECT THE OWNER'S PROPERTY FROM DIRT, DAMAGE, OR LOSS ARISING FROM CONTRACTOR WORK.
    - B. COMPLY WITH OSHA REQUIREMENTS AND TAKE ALL NECESSARY PRECAUTIONS FOR EMPLOYEE SAFETY.
    - C. PROTECT ALL OPEN PIPING, DUCT, AND EQUIPMENT, EXISTING AND NEW FROM CONSTRUCTION DIRT AND DUST. COVER, CAP, OR PLUG OPEN ENDS OF PIPING AND DUCT. KEEP EQUIPMENT CLOSED OR COVER AND SEAL EQUIPMENT OPENINGS. ANY MECHANICAL SYSTEMS, NEW AND/OR EXISTING OPERATED DURING CONSTRUCTION SHALL BE PROTECTED BY COVERING EACH RETURN AIR DUCT OPENING WITH MERV 8 FILTERS AND INSTALLING MERV 8 FILTER(S) IN EQUIPMENT FILTER RACK. PRIOR TO TESTING AND BALANCING, REMOVE FILTERS FROM FILTER RACKS AND INSTALL NEW MERV 8 FILTERS.
    - D. AT COMPLETION OF WORK, PRIOR TO EQUIPMENT START-UP, REMOVE COVERS, CAPS, OR PLUGS ON DUCT AND PIPING.

14. DAMAGE BY LEAKS
    - A. THIS CONTRACTOR IS SOLELY RESPONSIBLE FOR ALL DAMAGES TO THE PROPERTY (GROUNDS, WALKS, ROADS, BUILDING COMPONENTS, FINISHES, PIPING SYSTEMS, ELECTRICAL SYSTEMS, HVAC SYSTEMS, AND THEIR EQUIPMENT AND CONTENT) CAUSED BY LEAKS IN THE SYSTEMS BEING INSTALLED OR HAVING BEEN INSTALLED AS PART OF THIS WORK. ALL REPAIRS WILL BE MADE AT THIS CONTRACTOR'S EXPENSE.

15. DRAWINGS AND SPECIFICATIONS
    - A. DRAWINGS ARE DIAGRAMMATIC AND INTENDED TO SHOW GENERAL LOCATIONS OF DUCTS, PIPES, AND EQUIPMENT AND THE METHODS OF CONNECTING AND CONTROL. THE DRAWINGS SHALL BE FOLLOWED AS CLOSELY AS ACTUAL BUILDING CONDITIONS AND THE WORK OF OTHER TRADES PERMIT. THE DRAWINGS ARE NOT INTENDED TO SHOW EVERY CONNECTION IN DETAIL OR ALL OFFSETS, TRANSITIONS, OR FITTINGS REQUIRED FOR A COMPLETE SYSTEM NOR IS IT IMPLIED THAT ALL CONFLICTS BETWEEN BUILDING ELEMENTS AND/OR OTHER TRADES ARE INDICATED. DO NOT SCALE DRAWINGS. EXAMINE FIELD CONDITIONS AND SEE ARCHITECTURAL AND STRUCTURAL DRAWINGS FOR EXACT LOCATION OF DOORS, WINDOWS, LIGHTS, ETC.
    - B. THE DRAWINGS AND SPECIFICATIONS ARE MUTUALLY COMPLEMENTARY, AND ANY WORK REQUIRED BY ONE BUT NOT BY THE OTHER SHALL BE REQUIRED BY BOTH.
    - C. PRIOR TO INSTALLING EQUIPMENT, DUCT, OR PIPE COORDINATE PROPOSED LOCATIONS WITH EACH TRADE/DISCIPLINE AND GC. EXAMINE EACH DISCIPLINE'S DRAWINGS FOR CONSTRUCTION DETAILS, CEILING HEIGHTS, REQUIRED CLEARANCES, AND SPACE CONSTRAINTS. PROVIDE SYSTEMS INSTALLATION BASED ON THIS EXAMINATION AND COORDINATION. IMMEDIATELY REPORT INSTALLATION CONFLICTS IN WRITING TO THE GC. RESOLVE ALL CONFLICTS WITH GC AND OTHER TRADES PRIOR TO PROCEEDING. INSTALLING CONTRACTOR IS FULLY RESPONSIBLE FOR CORRECT INTERPRETATION AND APPLICATION OF ALL SIZES AND DIMENSIONS.
    - D. SIGNIFICANT DEVIATIONS OR CHANGES FROM THE DRAWINGS, WHICH ARE REQUIRED TO ACCOMPLISH THE INTENT OF THE CONTRACT DOCUMENTS MUST BE REVIEWED AND APPROVED BY THE ARCHITECT (ENGINEER) BEFORE PROCEEDING. IF THE CONTRACTOR BELIEVES CHANGES TO THE CONTRACT DRAWINGS ARE NECESSARY, SHOP DRAWINGS WITH WRITTEN DESCRIPTIONS OF THE PROPOSED CHANGES SHALL BE SUBMITTED TO THE ARCHITECT (ENGINEER) FOR APPROVAL.
    - E. ALL PIPE, DUCTS, VENTS, ETC., EXTENDING THROUGH WALLS AND ROOF SHALL BE FLASHED WATERPROOF. PROVIDE ALL FLASHING FOR PIPE AND DUCTWORK PENETRATING BUILDING ENVELOPE. PROVIDE DUCT AND/OR PIPE SLEEVES AT WALL PENETRATIONS. SEAL ANNULAR SPACE WEATHER TIGHT.

16. CONTROLS
    - A. PROVIDE COMPLETE EQUIPMENT CONTROLS, INCLUSIVE OF ALL COMPONENTS, VOLTAGES, PROGRAMMING, WIRING ETC. FOR COMPLETE AND OPERATIONAL SYSTEMS. MOUNT THERMOSTATS AND SWITCHES 4'-0" ABOVE FINISHED FLOOR. MOUNT OTHER SENSORS (HUMIDITY, CO2, CO, NOX, ETC.) PER MANUFACTURER'S IOM. PRIOR TO MOUNTING, COORDINATE THERMOSTAT LOCATION(S) WITH FINAL FIXTURES AND EQUIPMENT. DO NOT MOUNT THERMOSTATS IN DIRECT SUNLIGHT, IN DISCHARGE OF SUPPLY GRILLE(S), NEAR HEAT PRODUCING APPLIANCES OR EQUIPMENT, ON WALLS WITH INTERNAL HEAT SOURCES (DUCT OR PIPING), OR ON EXTERIOR WALLS. IF EXTERIOR WALL MOUNTING IS NECESSARY, PROVIDE INSULATED MOUNTING BASE. WHERE THERMOSTAT LOCATION IS SUBJECT TO DAMAGE, PROVIDE LOCKABLE HIGH-IMPACT GUARD.

17. PIPING
    - A. IN FINISHED AREAS, ALL PIPING SHALL BE CONCEALED UNLESS NOTED OTHERWISE.
    - B. SEE PIPE SCHEDULE FOR PIPE MATERIALS AND PIPE INSULATION.
    - C. DO NOT INSTALL PVC PIPING IN PLENUM AREAS.
    - D. PAINT PIPE TO MATCH OWNER'S OR BUILDING STANDARD.
    - E. PROVIDE PIPE LABELS AND FLOW DIRECTION PER BUILDING OR FACILITY'S STANDARD OR AS SCHEDULED. ORIENT ALL MARKERS SO AS TO BE VISIBLE FROM FLOOR LEVEL. AT A MINIMUM PIPE LABELS AND FLOW DIRECTION MARKERS SHALL BE LOCATED:
      - AT LEAST ONCE IN EACH ROOM
      - AT EQUIPMENT CONNECTIONS
      - AT ACCESS DOORS
      - AT BRANCH MAINS
      - ON ALL ACCESSIBLE PIPE A MAXIMUM OF 25' BETWEEN MARKERS.
    - F. BRANCH TAKE-OFFS SHALL BE MADE WITH SWING CONNECTIONS AS REQUIRED TO AVOID STRESS AT THESE POINTS.
    - G. DO NOT INSTALL ANY PIPING ABOVE ELECTRICAL PANELS AND/OR TRANSFORMERS.
    - H. INSTALL AND SIZE REFRIGERANT PIPE IN STRICT ACCORDANCE WITH EQUIPMENT/APPLIANCE MANUFACTURER'S IOM. DO NOT INSTALL REFRIGERANT PIPE BELOW GROUND. REFRIGERANT PIPE INSTALLED ON BUILDING EXTERIOR SHALL BE ROUTED TO MINIMIZE EXTERIOR EXPOSURE. INSULATE REFRIGERANT PIPE PER MANUFACTURER'S IOM. PROVIDE INSULATION EXPOSED TO AMBIENT CONDITIONS WITH A CONTINUOUS 3O MIL PVC JACKET.
    - I. ROUTE PIPE THROUGH ROOF WITH ALUMINUM PIPE HOOD, PATE CURB MODEL "PHA-2" WITH 14" TALL MODEL "PC-2" CURB. SEAL PIPE THROUGH CURB WEATHER-TIGHT.
    - J. ON HYDRONIC PIPING, PROVIDE MANUAL AIR VENTS AT ALL HIGH POINTS TO ALLOW BLEEDING OF AIR FROM THE SYSTEM, AND BALL VALVES WITH HOSE END DRAIN FITTINGS AT ALL LOW POINTS TO ALLOW DRAINING THE SYSTEM.
    - K. PRIOR TO INSTALLING EQUIPMENT/APPLIANCES, CAREFULLY CONSIDER FALL REQUIREMENTS OF CONDENSATE DRAIN PIPE. PROVIDE MINIMUM 1/8" / FOOT SLOPE. EXTEND CONDENSATE DRAIN PIPE TO AN APPROVED RECEPTOR AND TERMINATE VIA AN INDIRECT CONNECTION.
    - L. ALL HOLES REQUIRED THROUGH EXISTING FLOORS AND MASONRY WALLS SHALL BE CORE DRILLED.

18. DUCT MOUNTED SMOKE DETECTORS
    - A. DUCT MOUNTED SMOKE DETECTORS SHALL BE PROVIDED BY E.C. AND UPON DETECTING SMOKE, SHALL SHUT DOWN PROTECTED AIR SYSTEM.

19. SHOP DRAWINGS
    - A. SUBMIT SHOP DRAWINGS ON SCHEDULED AND NOTED EQUIPMENT AND MATERIALS. PRIOR TO SUBMITTAL, EACH SHOP DRAWING SHALL BE REVIEWED BY THE CONTRACTOR TO ASSURE THAT THE PROPOSED EQUIPMENT IS CLEARLY MARKED, HIGHLIGHTED, AND NOTED. ALL DIMENSIONS, QUANTITIES, CONNECTIONS, CAPACITATES AND ACCESSORIES SHALL BE CLEARLY SHOWN IN CONFORMANCE WITH THE CONTRACT DOCUMENTS, AND SHALL BE MARKED OR STAMPED TO CONFIRM THAT SUCH REVIEW WAS MADE AND COMPLIANCE WAS CONFIRMED. SHOP DRAWING SUBMITTED WITHOUT BEING MARKED, HIGHLIGHTED, AND NOTED WILL BE REJECTED WITHOUT REVIEW.
    - B. PROVIDE ADEQUATE TIME FOR SUBMITTAL REVIEW AND CORRECTIONS, IF ANY, TO PREVENT CONSTRUCTION DELAY. DO NOT PERFORM ANY PORTION OF WORK WHICH REQUIRES APPROVED SUBMITTALS UNTIL THE RESPECTIVE SUBMITTALS HAVE BEEN APPROVED BY THE ENGINEER.
    - C. REVIEW OF SHOP DRAWINGS BY THE OWNER, OWNER'S AGENT, ARCHITECT, OR ENGINEER IS FOR GENERAL COMPLIANCE WITH THE CONTRACT DOCUMENTS. THE CONTRACTOR IS SOLELY RESPONSIBILITY FOR COMPLYING WITH ALL TERMS OF THE CONTRACT DOCUMENTS AND FOR PERFORMANCE OF ALL EQUIPMENT AND MATERIALS PURCHASED, FOR QUANTITIES, PROPER FIT, AND OTHER DIMENSIONAL REQUIREMENTS.

20. DUCTWORK
    - A. REFER TO KEYED NOTES FOR CLARIFICATION OF DUCT DIMENSIONS. PROVIDE ALL DUCTWORK IN STRICT ACCORDANCE WITH THE SHEET METAL AND AIR CONDITIONING CONTRACTORS NATIONAL ASSOCIATION (SMACNA) "HVAC DUCT CONSTRUCTION STANDARDS - METAL AND FLEXIBLE", LATEST EDITION. U.N.O. ALL RIGID DUCTWORK SHALL BE GALVANIZED SHEET METAL. ALL EXPOSED DUCTWORK SHALL HAVE A MILL-PHOSPHATIZED FINISH FOR PAINT ADHESION. EXPOSED ROUND DUCT SHALL BE SPIRAL SEAM TYPE. NO FIBERGLASS DUCTBOARD WILL BE ALLOWED.
    - B. PROVIDE TURNING VANES AT ALL CHANGES IN DIRECTION.
    - C. UNLESS NOTED OTHERWISE, EACH DUCTED AIR DEVICE SHALL BE PROVIDED WITH A VOLUME DAMPER, WHETHER SHOWN ON THE PLANS OR NOT. PROVIDE A VOLUME DAMPER AT EACH BRANCH DUCT SERVING AN AIR DEVICE AND/OR AS SHOWN, DETAILED, AND SPECIFIED. WHERE A DUCT MOUNTED VOLUME DAMPER WOULD BE INACCESSIBLE, PROVIDE A VOLUME DAMPER IN THE AIR DEVICE GRILLE NECK OR A DAMPER WITH REMOTE CABLE CONTROL. PROVIDE EACH ROUND BRANCH DUCT TAKE-OFF FROM MAIN DUCT WITH SPIN-IN FITTING AND VOLUME BALANCING DAMPER. VOLUME DAMPERS SHALL BE YOUNG REGULATOR MODEL 5020R LOCKING QUADRANT VOLUME DAMPER WITH 2" HANDLE STANDOFF FOR INSULATION THICKNESS. WHERE BRANCH TAKE-OFF IS INACCESSIBLE FOR BALANCING, PROVIDE BALANCING DAMPER IN GRILLE NECK OR BOWDEN "270-275" REMOTE CABLE CONTROL.
    - D. ALL FLEXIBLE DUCT SHALL BE THERMAFLEX TYPE MKE, MAXIMUM 7'-0" LONG. FLEXDUCT SHALL BE INSTALLED IN ACCESSIBLE CONCEALED SPACES ONLY, FULLY STRETCHED OUT AND WITHOUT SAGS OR KINKS. CONNECTIONS TO FITTINGS AND AIR DEVICES SHALL BE MADE WITH TWO (2) BAND CLAMPS. BAND CLAMP THE INNER LINER TIGHT TO FITTING OR AIR DEVICE, THEN THE INSULATION AND VAPOR-PROOF JACKET SHALL BE CLAMPED TIGHT. FLEX DUCT INSTALLATION ABOVE INACCESSIBLE CEILINGS IS UNACCEPTABLE.

21. DUCT SEALING
    - A. IN CONDITIONED AREAS, SEAL ALL LONGITUDINAL AND TRANSVERSE JOINTS WITH A NON-HARDENING, NON-MIGRATING MASTIC OR LIQUID ELASTIC SEALANT, WITH VOC CONTENT NO GREATER THAN 250G/L AND RECOMMENDED BY THE MANUFACTURER FOR SEALING SHEET METAL DUCT. SEAL ALL JOINTS, SPIN-IN FITTINGS, AND FASTENING SCREWS WITH MASTIC. HVAC SYSTEM LEAKAGE SHALL NOT EXCEED 5% OF DESIGN FLOW. DUCT TAPE IS NOT ALLOWED.

23. TYPE I GREASE DUCT
    - A. SHOP FABRICATED GREASE DUCTS SHALL BE BLACK CARBON STEEL NOT LESS THAN 0.054" (16 GA.). ALL SEAMS, JOINTS, AND PENETRATIONS SHALL HAVE A LIQUID TIGHT, CONTINUOUS, EXTERNAL WELD. INSTALL DUCT IN STRICT ACCORDANCE WITH 2017 I.M.C.

24. DUCT INSULATION
    - A. SEE KEYED NOTES.

25. EQUIPMENT
    - A. INSTALL ALL EQUIPMENT AND MATERIALS IN STRICT ACCORDANCE WITH MANUFACTURER'S INSTALLATION AND OPERATIONS MANUAL AND IN STRICT ACCORDANCE WITH ALL LOCAL CODES AND REGULATIONS.
    - B. U.N.O. PROVIDE ALL MOTORIZED EQUIPMENT WITH VIBRATION ISOLATION MOUNTING AND FLEXIBLE DUCT AND FLEXIBLE PIPE CONNECTIONS.
    - C. LABEL ALL EQUIPMENT WITH ID TAGS, LETTERING SHALL BE 1" HIGH BLACK ON WHITE BACKGROUND. ID TAGS IN PLENUM SPACES SHALL BE PLENUM RATED. EQUIPMENT NOT PLENUM MOUNTED SHALL BE LABELED WITH ENGRAVED PHENOLIC RESIN NAMEPLATES ADHERED TO UNIT CABINET WITH RTV SILICONE. LETTERING SHALL BE 1" HIGH BLACK ON WHITE BACKGROUND.
    - D. ALL EQUIPMENT, DUCT, PIPE, ETC. MOUNTED FROM BOLTED CONNECTIONS SHALL HAVE DOUBLE NUTS AT ATTACHMENT TO STRUCTURE AND HANGER, NO EXCEPTIONS.

26. FIRE AND FIRE-SMOKE DAMPERS
    - A. PROVIDE FIRE DAMPERS AND/OR FIRE SMOKE DAMPERS AT DUCT PENETRATIONS OF RATED ASSEMBLIES AND AS REQUIRED BY AHJ. REFER TO ARCHITECTURAL DRAWINGS FOR ASSEMBLY RATINGS. INSTALL DAMPERS IN STRICT ACCORDANCE WITH MANUFACTURER'S DETAILS AND MAINTAIN MANUFACTURER'S DETAILS ONSITE FOR AHJ REVIEW. PROVIDE ACCESS PANELS OF ADEQUATE SIZE TO FACILITATE SERVICE ACCESS OF DAMPER. IN LIEU OF ACCESS PANELS, A REMOVABLE DUCT SECTION IS ACCEPTABLE.

27. OUTDOOR AIR INTAKES
    - A. PROVIDE A MINIMUM 10'-0" HORIZONTAL CLEARANCE BETWEEN MECHANICAL EQUIPMENT OUTDOOR AIR INTAKES AND EXHAUST FAN DISCHARGES, COMBUSTION EXHAUST, PLUMBING VENTS, AND ANY OTHER HAZARDOUS OR NOXIOUS CONTAMINANT.

28. AIR FILTERS
    - A. PROVIDE THREE (3) SETS OF NEW MERV 8 DISPOSABLE AIR FILTERS, PER THE FOLLOWING: FOR HVAC SYSTEMS OPERATED DURING CONSTRUCTION, PROVIDE FILTERS IN EQUIPMENT AND ON RETURN AIR DUCT OPENINGS TO PROTECT DUCT FROM DIRT; IN HVAC EQUIPMENT PRIOR TO AIR TESTING, ADJUSTING, AND BALANCING; AND AT PROJECT COMPLETION - ONE (1) SPARE SET FOR HVAC EQUIPMENT.

29. COMPLETION OF WORK
    - AC. UPON COMPLETION OF WORK, INSPECT INSTALLATION OF ALL EQUIPMENT AND SYSTEMS. OPEN ALL ACCESS COVERS ON EQUIPMENT. REMOVE ALL SURPLUS MATERIALS AND DEBRIS AND PROPERLY DISPOSE OF SAME.

30. TESTING, ADJUSTING, & BALANCING
    - A. PRIOR TO EQUIPMENT START-UP, REMOVE COVERS, CAPS, OR PLUGS ON DUCT AND PIPING.
    - B. UPON COMPLETION OF WORK, MC SHALL PROVIDE HVAC TESTING:
      - i. AFTER INSTALLING EQUIPMENT AND AFTER ELECTRICAL CIRCUITRY HAS BEEN ENERGIZED, TEST UNITS FOR COMPLIANCE WITH REQUIREMENTS.
      - ii. INSPECT FOR AND REMOVE SHIPPING BOLTS, BLOCKS, AND TIE-DOWN STRAPS.
      - iii. OPERATIONAL TEST: AFTER ELECTRICAL CIRCUITRY HAS BEEN ENERGIZED, START UNITS TO CONFIRM PROPER MOTOR ROTATION, BELT TENSION, DAMPER FUNCTION, COOLING FUNCTION, HEATING FUNCTION, AND UNIT OPERATION.
      - iv. TEST AND ADJUST CONTROLS AND SAFETIES. REPLACE DAMAGED AND MALFUNCTIONING CONTROLS AND EQUIPMENT.
      - v. REMOVE AND REPLACE MALFUNCTIONING UNITS AND RETEST AS SPECIFIED ABOVE.
      - vi. SUBMIT TESTING REPORT TO ARCHITECT (ENGINEER).
    - C. UPON COMPLETION OF WORK, PROVIDE AN HVAC TESTING, ADJUSTING, AND BALANCING REPORT PERFORMED BY AN INDEPENDENT CONTRACTOR CERTIFIED BY AABC, NEBB, OR TABB. BALANCE SYSTEMS WITHIN 10% OF DESIGN FLOW. TAB SHALL BE PERFORMED IN STRICT ACCORDANCE WITH SMACNA'S "TAB PROCEDURAL GUIDE", LATEST EDITION. MC SHALL BE PRESENT DURING TAB SHOULD ANY CORRECTIONS BE REQUIRED.

31. CLOSEOUT - AT CONSTRUCTION COMPLETION AND PRIOR TO TURNOVER TO OWNER (TENANT):
    - A. PROVIDE FINAL MARK-UPS IN PDF (DWG) FORMAT TO ARCHITECT AND ENGINEER.
    - B. PROVIDE A SIGNED CERTIFICATE OF INSPECTION AT THE PROJECT COMPLETION.
    - C. PROVIDE THE OWNER WITH A BOUND OWNER'S MANUAL. THE MANUAL SHALL CONSIST OF A THREE-RING LOOSE-LEAF BINDER CONTAINING ALL PRINTED MATERIAL FOR INSTALLED EQUIPMENT INCLUDING BUT NOT LIMITED TO: WARRANTY INFORMATION, SERVICE AND CLEANING INSTRUCTIONS, NOTICES TO OWNER, OPERATING MANUALS, AND MAINTENANCE INSTRUCTIONS.
    - D. TRAIN THE OWNER IN THE THERMOSTATS FUNCTIONS AND OPERATING THE EQUIPMENT USING THE THERMOSTATS. CONTRACTOR SHALL PROGRAM THE THERMOSTATS PER THE OWNER'S TIME SCHEDULES AND SETPOINTS.

32. WARRANTY
    - A. ON ALL WORK INCLUDED IN THIS CONTRACT, PROVIDE ONE (1) YEAR UNCONDITIONAL WRITTEN WARRANTY FOR LABOR, EQUIPMENT, AND MATERIALS TO REPLACE ALL FAULTY MATERIALS AND/OR LABOR, AT NO COST TO OWNER, BEGINNING ON DATE OF ACCEPTANCE BY OWNER.
    - B. WITHIN THE WARRANTY PERIOD, DURING THE OPPOSITE SEASON (HEATING/COOLING) FROM THAT IN WHICH THE INITIAL ADJUSTMENTS WERE MADE, THIS CONTRACTOR SHALL MAKE AN INSPECTION OF THE INSTALLED BUILDING SYSTEMS. AT THIS INSPECTION, WITH SYSTEMS OPERATING, THIS CONTRACTOR SHALL MAKE ANY NECESSARY MODIFICATIONS TO THE INITIAL ADJUSTMENTS REQUIRED TO PRODUCE OPTIMUM OPERATION OF THE SYSTEM COMPONENTS, TO PRODUCE THE PROPER CONDITIONS IN EACH SPACE.

-- END OF SPECIFICATIONS --

Oculus Inc.
1 S. Memorial Dr., Suite 1500
St. Louis, MO 63102
314.367.6100
www.oculusinc.com

CASE Engineering Inc.
796 Merus Court
St. Louis, MO 63026
T 636.349.1600
F 636.349.1730
CERTIFICATE OF AUTHORITY NO. 4554-11

NINO'S Southern Sides

#	Description	Date

WISCONSIN
MATTHEW R. CASE
E-49681
ST. LOUIS MO
PROFESSIONAL ENGINEER

12/11/2024

These drawings/specifications are the property of Oculus Inc. They are furnished as contract documents only. The seal(s) and signature(s) apply only to the document to which they are affixed, and expressly disclaim any responsibility for all other plans, specifications, estimates, reports or other documents or instruments relating to or intended to be used for any part or parts of the architectural or engineering project. Additionally these drawings and seal(s) shall in no way convey or imply any type of warranty or certification relating to the performance of products and materials beyond those provided by their respective manufacturer.
© 2024 Oculus Inc.

- ISSUED FOR PERMIT

Client Approval

MECHANICAL SPECIFICATIONS

Project #	68423-WI01
Issue Date	12/11/2024
Scale	AS INDICATED
Drawn by	
Checked by	

M1.0

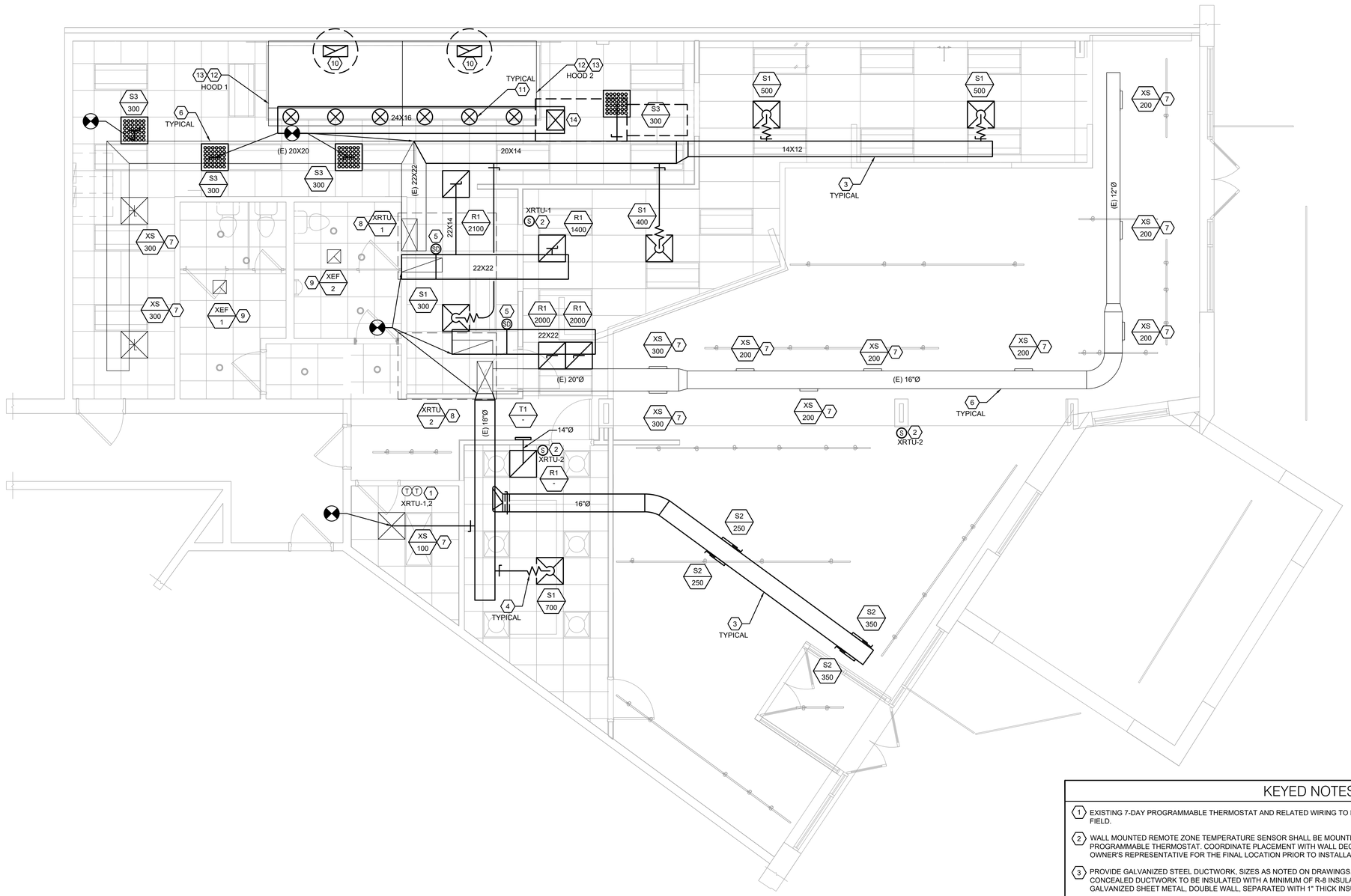

MECHANICAL SYMBOLS LEGEND

T	THERMOSTAT
	FLEXIBLE DUCT
	VOLUME DAMPER
FD	FIRE DAMPER
	CEILING SUPPLY AIR DIFFUSER
	CEILING RETURN AIR GRILLE
	SIDEWALL AIR DIFFUSER OR GRILLE
	NEW DUCTWORK
	EXISTING DUCTWORK
CD	CONDENSATE DRAIN
G	GAS PIPING
	PIPE TURNING DOWN
	PIPE TURNING UP
	BALL VALVE
	GATE VALVE
	CONNECTION OF NEW TO EXISTING
	CHECK VALVE
	GAS COCK
	UNION
	PRESSURE GAUGE
	STRAINER
AFF	ABOVE FINISHED FLOOR
S1 / 100	AIR DEVICE # / CFM — S - SUPPLY, R - RETURN, E - EXHAUST
	TURNING VANES

PLAN NORTH

1 **MECHANICAL FLOOR PLAN**

1/4" = 1'-0"

0 2' 4' 8'

KEYED NOTES

1. EXISTING 7-DAY PROGRAMMABLE THERMOSTAT AND RELATED WIRING TO REMAIN. VERIFY EXACT LOCATION AND OPERATION IN FIELD.
2. WALL MOUNTED REMOTE ZONE TEMPERATURE SENSOR SHALL BE MOUNTED AT 48" AFF, AND WIRED BACK TO RESPECTIVE PROGRAMMABLE THERMOSTAT. COORDINATE PLACEMENT WITH WALL DECOR AND EQUIPMENT. FIELD VERIFY WITH THE OWNER'S REPRESENTATIVE FOR THE FINAL LOCATION PRIOR TO INSTALLATION.
3. PROVIDE GALVANIZED STEEL DUCTWORK, SIZES AS NOTED ON DRAWINGS. DUCTWORK SIZES ARE SHEET METAL SIZES. CONCEALED DUCTWORK TO BE INSULATED WITH A MINIMUM OF R-8 INSULATION. ALL EXPOSED ROUND DUCT SHALL BE SPIRAL GALVANIZED SHEET METAL, DOUBLE WALL, SEPARATED WITH 1" THICK INSULATION, INNER WALL SHALL BE PERFORATED.
4. MAXIMUM FIVE (5) FEET OF FLEXIBLE DUCT. FLEX DUCT SHALL NOT BE USED IN LIEU OF RIGID ELBOWS OR FITTINGS.
5. IF NOT EXISTING PROVIDE R.A. DUCT MOUNTED SMOKE DETECTOR. SMOKE DETECTOR SHALL BE INTERLOCKED TO DE-ENERGIZE UNIT UPON DETECTION OF SMOKE. POWER WIRING BY ELECTRICAL CONTRACTOR, COORDINATE WITH ELECTRICAL DRAWINGS/ CONTRACTOR.
6. EXISTING DUCTWORK IN THIS AREA TO BE REUSED. MECHANICAL CONTRACTOR SHALL VERIFY EXISTING DUCTWORK DIMENSIONS. NOTIFY ENGINEER OF DEFICIENCIES. PATCH AND SEAL ALL UNUSED OPENINGS IN DUCTWORK WITH INSULATED BLANKS.
7. EXISTING AIR DEVICE TO REMAIN. REBALANCE TO CFM INDICATED. CLEAN AND PROVIDE MAINTENANCE AS REQUIRED FOR PROPER OPERATION. PROVIDE NEW BRANCH DUCTWORK IF REQUIRED.
8. EXISTING ROOF TOP UNIT (XRTU-1,2) TO REMAIN. VERIFY PROPER OPERATION AND LOCATION IN FIELD.
9. EXISTING BATHROOM EXHAUST FAN (XEF-1,2) TO REMAIN, CLEAN TO LIKE NEW CONDITION AND REBALANCE TO CFM SHOWN.
10. 22"X10" EXHAUST RISER UP FROM HOOD COLLAR. EXTEND TYPE 1 EXHAUST DUCTWORK, FULL SIZE OF RISER, UP TO EXHAUST FAN ON ROOF. REFER TO DETAIL EXHAUST FAN AND TYPE 1 DUCT DETAILS. REFER TO HOOD PLANS FOR ADDITIONAL INFORMATION. MECHANICAL CONTRACTOR TO UTILIZE TYPE-1 WELDED EXHAUST DUCT AND 2-HR FIRE BARRIER DUCT WRAP.
11. SUPPLY DUCT RISER UP FROM 14Ø" DUCT COLLAR (TYPICAL OF 6). EXTEND DUCT TO MAIN SUPPLY DUCT, AND BALANCE TO CFM INDICATED ON SHEET H1-01.
12. EXHAUST HOOD TO BE FURNISHED BY OWNER, INSTALLED BY MECHANICAL CONTRACTOR. SEE DETAILS AND HOOD DRAWINGS FOR ADDITIONAL INFORMATION. VOLUME OF EXHAUST PER U.L. LISTING FOR HOOD. SEE ARCHITECTURAL DRAWINGS FOR HOOD MOUNTING LOCATION AND DIMENSIONS.
13. PROVIDE FIRE SUPPRESSION SYSTEM FOR HOOD. MECHANICAL CONTRACTOR SHALL INSTALL NEW FIRE SUPPRESSION GAS VALVE AND MAKE ALL ELECTRICAL CONNECTIONS. GC TO PROVIDE FINAL FIRE SYSTEM HOOKUP.
14. 18"X16" MAKE-UP AIR SUPPLY DUCT UP THROUGH ROOF TO MAKE-UP AIR UNIT LOCATED ON ROOF.

Oculus Inc.
1 S. Memorial Dr., Suite 1500
St. Louis, MO 63102
314.367.6100
www.oculusinc.com

CASE Engineering Inc.
796 Meriux Court
St. Louis, MO 63026
T 636.349.1600
F 636.349.1730
CERTIFICATE OF AUTHORITY NO. 4254-11

#	Description	Date

WISCONSIN PROFESSIONAL ENGINEER MATTHEW R. CASE E-49681 ST. LOUIS

12/11/2024

These drawings/specifications are the property of Oculus Inc. They are furnished as contract documents only. The seal(s) and signature(s) apply only to the document to which they are affixed, and expressly disclaim any responsibility for all other plans, specifications, estimates, reports or other documents or instruments relating to or intended to be used for any part or parts of the architectural or engineering project. Additionally these drawings and seal(s) shall in no way convey or imply any type of warranty or certification relating to the performance of products and materials beyond those provided by their respective manufacturer.
© 2024 Oculus Inc.

- ISSUED FOR PERMIT

Client Approval

MECHANICAL FLOOR PLAN

Project #	68423-WI01
Issue Date	12/11/2024
Scale	AS INDICATED
Drawn by	
Checked by	

M2.0

TI TEMPLATE V1.0
10-11-2011

TI TEMPLATE V1.0
10-11-2011

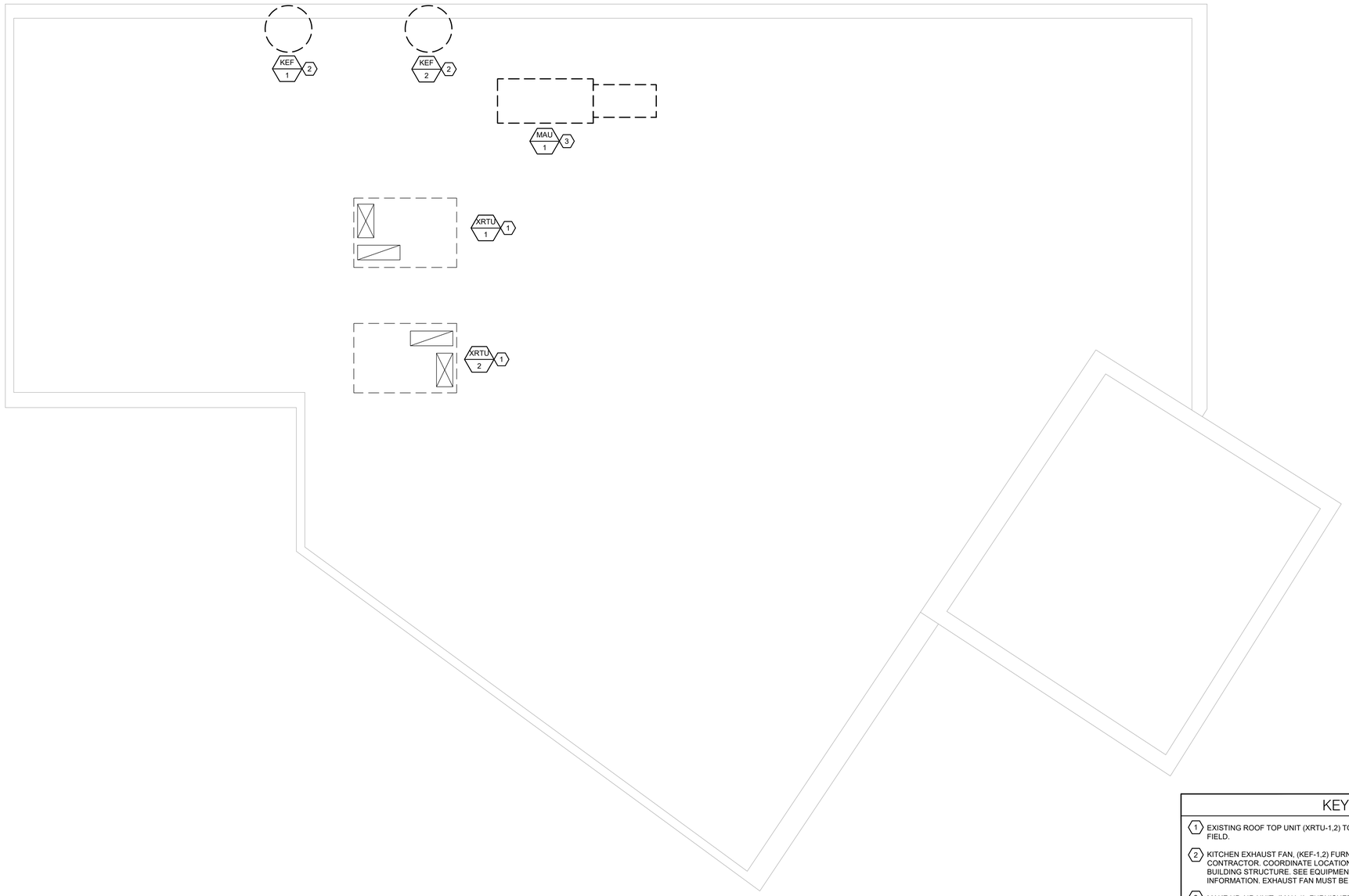

PLAN NORTH

1 **MECHANICAL ROOF PLAN**

1/4" = 1'-0"

0 2' 4' 8'

KEYED NOTES

1. EXISTING ROOF TOP UNIT (XRTU-1,2) TO REMAIN. VERIFY PROPER OPERATION AND LOCATION IN FIELD.
2. KITCHEN EXHAUST FAN, (KEF-1,2) FURNISHED BY OWNER, INSTALLED BY MECHANICAL CONTRACTOR. COORDINATE LOCATION OF EXHAUST FAN WITH ARCHITECTURAL DRAWINGS AND BUILDING STRUCTURE. SEE EQUIPMENT SCHEDULE, AND HOOD DRAWINGS FOR ADDITIONAL INFORMATION. EXHAUST FAN MUST BE AT LEAST 10'-0" FROM ALL OUTDOOR AIR INTAKES.
3. MAKE UP AIR UNIT, (MAU-1), FURNISHED BY OWNER, INSTALLED BY MECHANICAL CONTRACTOR. COORDINATE LOCATION IN FIELD WITH ARCHITECTURAL DRAWINGS AND STRUCTURAL DRAWINGS. SEE EQUIPMENT SCHEDULE AND FAN/HOOD DETAILS FOR ADDITIONAL INFORMATION.

MECHANICAL UNIT SUPPORT

RELATED TO STRUCTURAL SUPPORT:
ALL NEW, REPLACEMENT, AND/OR RELOCATED MECHANICAL UNIT(S), KITCHEN EXHAUST HOOD(S), MAKE-UP AIR UNIT(S), ELECTRICAL TRANSFORMER(S), WATER HEATER(S), INCLUDING ANY CURB(S) AND/OR CURB ADAPTOR(S)/TRANSITION CURB(S) (WHERE APPLICABLE), ARE SHOWN FOR "REFERENCE-ONLY".

ADEQUACY OF THE STRUCTURE'S ABILITY TO SUPPORT ANY OR ALL OF THESE SYSTEMS OR COMPONENT WEIGHTS, INCLUDING THE EFFECTS OF DEFLECTION, POTENTIAL FOR PONDING, SNOW DRIFTING (AS APPLICABLE), WIND LOADING AND SEISMIC LOADING HAS NOT BEEN EVALUATED BY CASE ENGINEERING, INC. CONTRACTOR SHALL BE RESPONSIBLE FOR ADEQUACY AND CODE COMPLIANCE OF EXISTING STRUCTURE TO SUPPORT PROPOSED NEW EQUIPMENT.

Oculus Inc.
1 S. Memorial Dr., Suite 1500
St. Louis, MO 63102
314.367.6100
www.oculusinc.com

CASE Engineering Inc.
796 Meriux Court
St. Louis, MO 63026
T 636.349.1600
F 636.349.1730
CERTIFICATE OF AUTHORITY NO. 4254-11

NINO'S Southern Sides

#	Description	Date

WISCONSIN MATTHEW R. CASE E-49681 ST. LOUIS, MO PROFESSIONAL ENGINEER

12/11/2024

These drawings/specifications are the property of Oculus Inc. They are furnished as contract documents only. The seal(s) and signature(s) apply only to the document to which they are affixed, and expressly disclaim any responsibility for all other plans, specifications, estimates, reports or other documents or instruments relating to or intended to be used for any part or parts of the architectural or engineering project. Additionally these drawings and seal(s) shall in no way convey or imply any type of warranty or certification relating to the performance of products and materials beyond those provided by their respective manufacturer.
© 2024 Oculus Inc.

- ISSUED FOR PERMIT

Client Approval

MECHANICAL ROOF PLAN

Project #	68423-WI01
Issue Date	12/11/2024
Scale	AS INDICATED
Drawn by	
Checked by	

M2.1

TI TEMPLATE V1.0
10-11-2011

AIR DEVICE SCHEDULE

PLAN MARK	MANUFACTURER	MODEL	MATL.	NECK SIZE	FRAME TYPE	PANEL SIZE	REMARKS
S1	TITUS	OMNI	ST	SCHED	LAY-IN	24"x24"	1,2
S2	TITUS	300FL	ST	12"x8"	DUCT MOUNTED	14"x10"	2,3
S3	TITUS	PAS	ST	SCHED	LAY-IN	24"x24"	1,2
R1	TITUS	PAR	ST	22"x22"	LAY-IN	24"x24"	2
T1	TITUS	350RL	ST	12"x12"	FLANGED	14"x14"	2
XS	EXISTING	-	-	-	-	-	4

1. BRANCH DUCT SAME DIAMETER AS GRILLE NECK SIZE.
2. TO BE PAINTED AS NOTED ON ARCH SHEETS.
3. PROVIDE WITH FACTORY BALANCING DAMPER IN GRILLE NECK.
4. EXISTING AIR DEVICE TO REMAIN, SEE FLOOR PLAN. CONTRACTOR SHALL CLEAN AIR DEVICE TO LIKE NEW CONDITION AND BALANCE TO SCHEDULED AIRFLOW. PROVIDE NEW ACCESSORIES AS REQUIRED.

DIFFUSER NECK SIZE SCHEDULE

NECK SIZE	CFM
6"Ø	0 - 100
8"Ø	110 - 250
10"Ø	260 - 400
12"Ø	410 - 600
14"Ø	610 - 1000
16"Ø	1010 - 1400

FAN SCHEDULE

MARK	MAKE	MODEL	CFM	ESP IN.W.G.	MOTOR SONES	MOTOR DRIVE	MOTOR RPM	MOTOR HP	MOTOR V/PH/HZ	WEIGHT LBS.	REMARKS
XEF-1,2	EXISTING	-	150	-	-	-	-	-	-	EXISTING	1
KEF-1,2	CAPTIVEAIRE	NCA16FA	2350	0.7	10.3	-	869	1.0	208/3	150	2,3

1. EXISTING TO REMAIN, CLEAN TO LIKE NEW CONDITION AND BALANCE TO CFM INDICATED. VERIFY PROPER OPERATION IN FIELD AND PROVIDE MAINTENANCE AS NECESSARY.
2. SEE HOOD DRAWINGS FOR OPTIONS AND ACCESSORIES, AND MORE INFORMATION.
3. KITCHEN EXHAUST FAN FURNISHED BY OWNER, INSTALLED BY MECHANICAL CONTRACTOR. INTERLOCK WITH MAU-1 FOR SIMULTANEOUS OPERATION.

AIR BALANCE SCHEDULE

UNIT MARK	CFM
XRTU-1 (OA)	+900
XRTU-2 (OA)	+1000
MAU-1 (OA)	+1000
XEF-1	-150
XEF-2	-150
KEF-1	-75
BLDG. TOTAL	325 CFM

ROOFTOP UNIT SCHEDULE

MARK	MFR	MODEL NO.	TONS	CFM	O.A. CFM	ESP	HP	COOLING MBH TTL/SEN	COOLING EDB/EWB (°F)	COOLING LDB/LWB (°F)	COOLING AMB (°F)	HEATING GAS MBH IN/OUT	HEATING LT (°F)	ELECTRICAL MCA/MOCP	ELECTRICAL V/PH	EER/ SEER	WEIGHT (LBS)	REMARKS
XRTU-1	CARRIER	48TFE012---501GA	10.0	4000	1000	1.0	-	120/96	77.9/65.6	55.67/55.2	95	224/179.2	90.8	45.9/50	208/3	-/-	EXISTING	1,2,3
XRTU-2	CARRIER	48TJE012---501GA	10.0	3500	900	1.0	-	120/96	77.7/65.4	55.47/54.9	95	220/176	91.58	51.2/60	208/3	-/-	EXISTING	1,2,3

1. EXISTING RTU TO REMAIN. CLEAN EVAPORATOR AND CONDENSER COILS, CHECK REFRIGERANT CHARGE, ADD REFRIGERANT, AS REQUIRED, ADJUST AND/OR REPLACE BELTS, AS REQUIRED. REPLACE ALL FILTERS. EXISTING PIPING AND VALVES TO REMAIN. VERIFY VOLTAGE AND PROPER OPERATION IN FIELD. COORDINATE EXACT LOCATION IN FIELD.
2. HVAC CONTRACTOR SHALL FIELD VERIFY EXISTING CONTROLS, VALVES, AND CONNECTIONS. PROVIDE ADDITIONAL CONTROLS AND ACCESSORIES, AS REQUIRED TO MEET DESIGN INTENT.
3. FIELD VERIFY ALL ELECTRICAL REQUIREMENTS AND VOLTAGES WITH ELECTRICAL CONTRACTOR.

MAU SCHEDULE

MARK	MAKE	MODEL	MAX CFM	ESP IN W.G.	COOLING TOT. MBH	COOLING SEN. MBH	HEATING GAS (MBH) IN/OUT	HEATING TEMP RISE	MOTOR SONES	MOTOR RPM	MOTOR HP	MOTOR V/PH/HZ	MOTOR FLA	WEIGHT LBS.	REMARKS
MAU-1	CAPTIVEAIRE	A2-D.500-G15	4000	0.45	-	-	441/405	95°F	14.3	874	3	208/3/60	9.5	823	1,2,3

1. MAKEUP AIR UNIT FURNISHED BY OWNER, INSTALLED BY MECHANICAL CONTRACTOR. INTERLOCK MAU-1 WITH KEF-1 AND KEF-2.
2. SEE HOOD DRAWINGS FOR MORE INFORMATION.

Oculus Inc.
1 S. Memorial Dr., Suite 1500
St. Louis, MO 63102
314.367.6100
www.oculusinc.com

CASE Engineering Inc.
796 Meriex Court
St. Louis, MO 63026
T 636.349.1600
F 636.349.1730
CERTIFICATE OF AUTHORITY NO. 4254-11

#	Description	Date

WISCONSIN PROFESSIONAL ENGINEER
MATTHEW R. CASE
E-49681
ST. LOUIS, MO

12/11/2024

These drawings/specifications are the property of Oculus Inc. They are furnished as contract documents only. The seal(s) and signature(s) apply only to the document to which they are affixed, and expressly disclaim any responsibility for all other plans, specifications, estimates, reports or other documents or instruments relating to or intended to be used for any part or parts of the architectural or engineering project. Additionally these drawings and seal(s) shall in no way convey or imply any type of warranty or certification relating to the performance of products and materials beyond those provided by their respective manufacturer.
© 2024 Oculus Inc.

- ISSUED FOR PERMIT

Client Approval

MECHANICAL SCHEDULES

Project #	68423-WI01
Issue Date	12/11/2024
Scale	AS INDICATED
Drawn by	
Checked by	

M3.0

TI TEMPLATE V1.0
10-11-2011

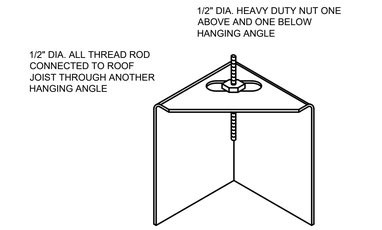

*HANGING RODS AND NUTS TO BE SUPPLIED BY HOOD INSTALLER. HANGING ANGLE IS PRE-PUNCHED AT FACTORY

ND-2 HANGING ANGLE DETAIL
NO SCALE

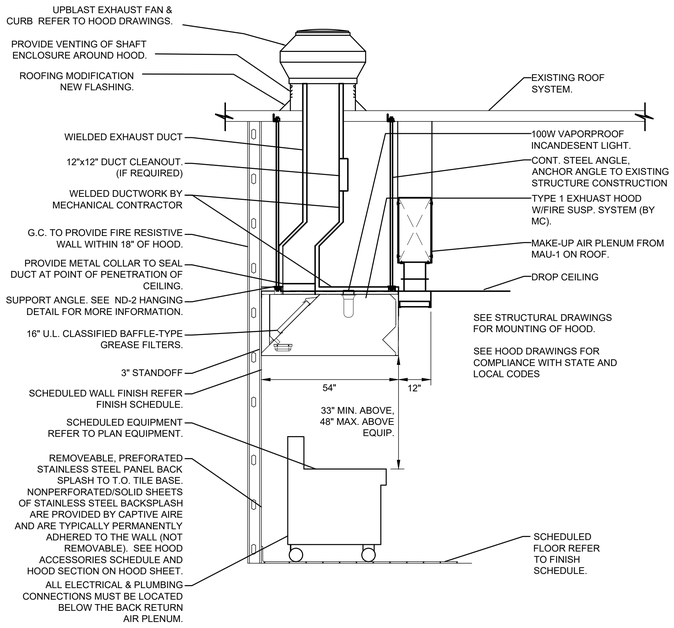

EXHAUST HOOD DETAIL
NO SCALE

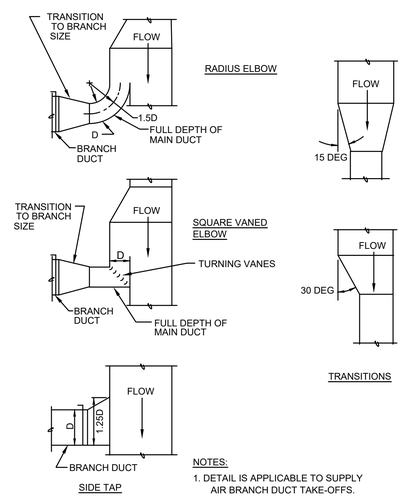

NOTES:
1. DETAIL IS APPLICABLE TO SUPPLY AIR BRANCH DUCT TAKE-OFFS.

BRANCH DUCT TAKEOFFS AND TRANSITIONS
NO SCALE

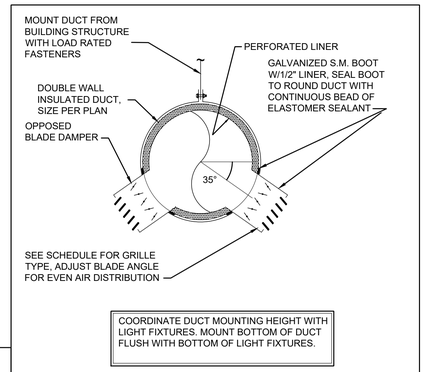

COORDINATE DUCT MOUNTING HEIGHT WITH LIGHT FIXTURES. MOUNT BOTTOM OF DUCT FLUSH WITH BOTTOM OF LIGHT FIXTURES.

EXPOSED ROUND DUCT DETAIL
NO SCALE

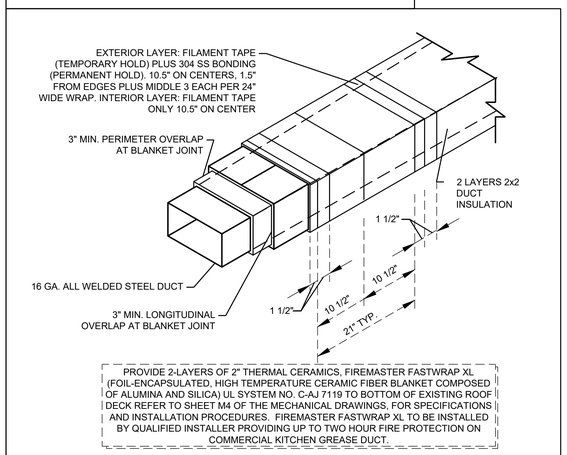

PROVIDE 2-LAYERS OF 2" THERMAL CERAMICS, FIREMASTER FASTWRAP XL (FOIL-ENCAPSULATED, HIGH TEMPERATURE CERAMIC FIBER BLANKET COMPOSED OF ALUMINA AND SILICA) UL SYSTEM NO. C-AJ 7119 TO BOTTOM OF EXISTING ROOF DECK REFER TO SHEET M4 OF THE MECHANICAL DRAWINGS, FOR SPECIFICATIONS AND INSTALLATION PROCEDURES. FIREMASTER FASTWRAP XL TO BE INSTALLED BY QUALIFIED INSTALLER PROVIDING UP TO TWO HOUR FIRE PROTECTION ON COMMERCIAL KITCHEN GREASE DUCT.

TYPE I EXHAUST DUCT DETAIL
NO SCALE

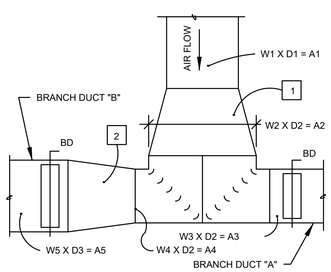

1 TRANSITION FROM W1 X D1 TO W2 X D2

2 FOR UNEQUAL BRANCH DUCTS, TRANSITION TO BRANCH DUCT SIZE

DUCT TEE FITTING
NO SCALE

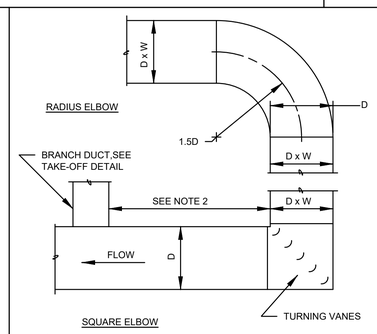

NOTES:
1. UNLESS SPECIFICALLY NOTED OTHERWISE, DETAIL APPLIES TO ALL SUPPLY, ALL EXHAUST, AND ALL RETURN AIR ELBOWS.
2. BRANCH DUCT TAKE-OFFS MUST BE A MINIMUM OF 4D DOWNSTREAM OF EITHER TYPE OF ELBOW, AND NOT LESS THAN 3D UPSTREAM.

DUCT ELBOW
NO SCALE

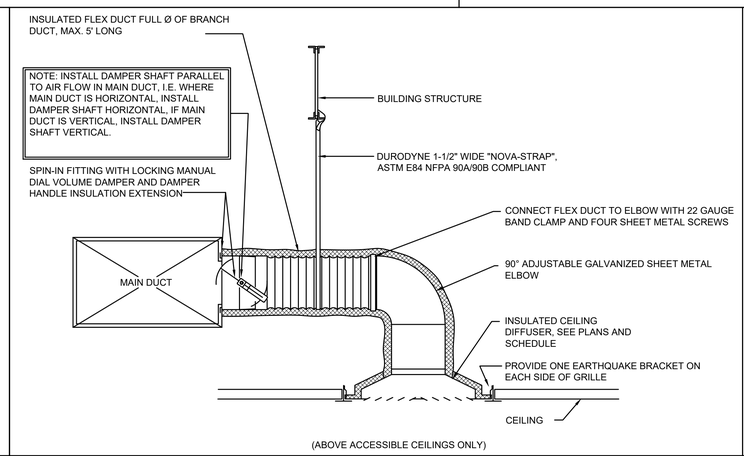

BRANCH DUCT - AIR GRILLE DETAIL
NO SCALE

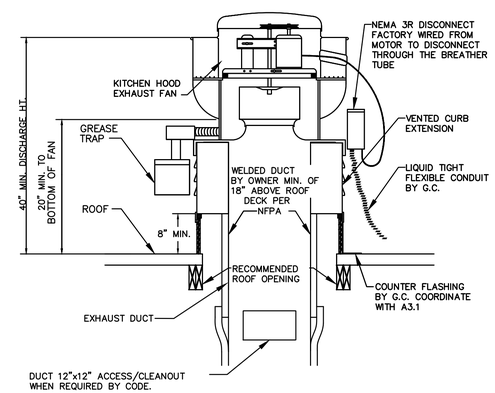

RANGE HOOD EXHAUST FAN DETAIL
NO SCALE

Oculus Inc.
1 S. Memorial Dr., Suite 1500
St. Louis, MO 63102
314.367.6100
www.oculusinc.com

CASE Engineering Inc.
796 Meriac Court
St. Louis, MO 63026
T 636.349.1600
F 636.349.1730
CERTIFICATE OF AUTHORITY NO. 4254-11

NINO'S Southern Sides

#	Description	Date

WISCONSIN MATTHEW R. CASE E-49681 ST. LOUIS MO PROFESSIONAL ENGINEER
12/11/2024

These drawings/specifications are the property of Oculus Inc. They are furnished as contract documents only. The seal(s) and signature(s) apply only to the document to which they are affixed, and expressly disclaim any responsibility for all other plans, specifications, estimates, reports or other documents or instruments relating to or intended to be used for any part or parts of the architectural or engineering project. Additionally these drawings and seal(s) shall in no way convey or imply any type of warranty or certification relating to the performance of products and materials beyond those provided by their respective manufacturer.
© 2024 Oculus Inc.

- ISSUED FOR PERMIT

Client Approval

MECHANICAL DETAILS

Project #	68423-WI01
Issue Date	12/11/2024
Scale	AS INDICATED
Drawn by	
Checked by	

M4.0

TI TEMPLATE V1.0
10-11-2011

HOOD INFORMATION – Job#1873815

HOOD NO.	TAG	MODEL	LENGTH	MAX. COOKING TEMP.	EXHAUST PLENUM: TOTAL EXH. CFM	RISER(S): WIDTH	LENG.	DIA.	CFM	S.P.	TOTAL SUPPLY CFM	HOOD CONSTRUCTION	HOOD CONFIG.: END TO END	ROW
1	Left	6024 ND-2-PSP-F	10' 0.00"	600 Deg.	2350	10"	22"		2350	-0.496"	1645	430 SS Where Exposed	LEFT	ALONE
2	Right	6024 ND-2-PSP-F	10' 0.00"	600 Deg.	2350	10"	22"		2350	-0.496"	1645	430 SS Where Exposed	RIGHT	ALONE

HOOD INFORMATION

HOOD NO.	TAG	FILTER(S): TYPE	QTY.	HEIGHT	LENGTH	LIGHT(S): QTY.	TYPE	WIRE GUARD	UTILITY CABINET(S): LOCATION	FIRE SYSTEM: TYPE	SIZE	ELECTRICAL: MODEL #	SWITCHES: QUANTITY	FIRE SYSTEM PIPING	HOOD HANGING WGHT
1	Left	SS Baffle with Handles	6	16"	20"	3	Incandescent	NO						NO	459 LBS
2	Right	SS Baffle with Handles	6	16"	20"	3	Incandescent	NO						NO	459 LBS

PERFORATED SUPPLY PLENUM(S)

HOOD NO.	TAG	POS.	LENGTH	WIDTH	HEIGHT	TYPE	RISER(S): WIDTH	LENG.	DIA.	CFM	S.P.
1	Left	Front	120"	16"	6"	MUA			14"	548	0.256"
						MUA			14"	548	0.256"
						MUA			14"	548	0.256"
2	Right	Front	120"	16"	6"	MUA			14"	548	0.256"
						MUA			14"	548	0.256"
						MUA			14"	548	0.256"

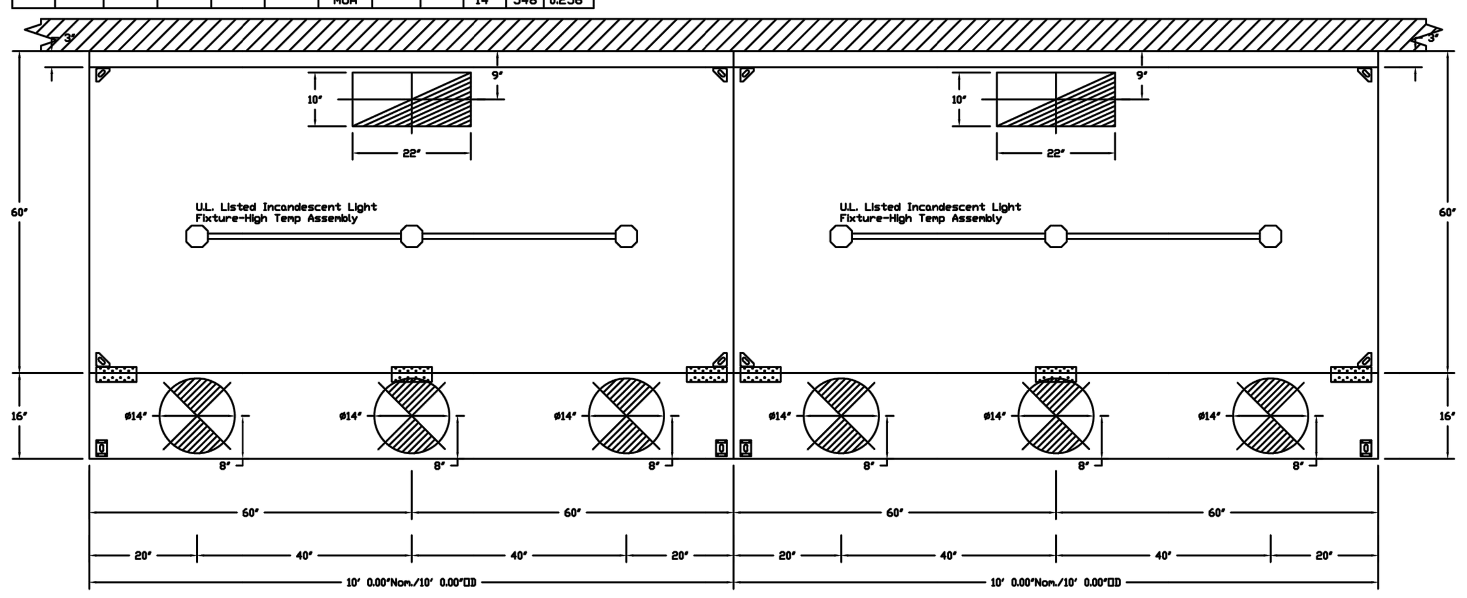

PLAN VIEW – Hood #1 (Left)
10' 0.00" LONG 6024ND-2-PSP-F

PLAN VIEW – Hood #2 (Right)
10' 0.00" LONG 6024ND-2-PSP-F

EXHAUST FAN INFORMATION – Job#1873815

FAN UNIT NO.	TAG	FAN UNIT MODEL #	CFM	ESP.	RPM	H.P.	ø	VOLT	FLA	WEIGHT (LBS.)	SONES
2		NCA16FA	2350	0.700	869	1.000	3	208	3.3	150	10.3
3		NCA16FA	2350	0.700	869	1.000	3	208	3.3	150	10.3

MUA FAN INFORMATION – Job#1873815

FAN UNIT NO.	TAG	FAN UNIT MODEL #	BLOWER	HOUSING	CFM	ESP.	RPM	H.P.	ø	VOLT	FLA	WEIGHT (LBS.)	SONES
1		A2-D.500-G15	G15-PB	A2-D.500	4000	0.450	874	3.000	3	208	9.5	823	14.3

GAS FIRED MAKE-UP AIR UNIT(S)

FAN UNIT NO.	TAG	ACTUAL AIR DENSITY?	INPUT BTUs	OUTPUT BTUs	TEMP. RISE	REQUIRED INPUT GAS PRESSURE	GAS TYPE
1		YES	441130	405840	95 deg F	7 in. w.c. - 14 in. w.c.	Natural

FAN OPTIONS

FAN UNIT NO.	TAG	OPTION (Qty. - Descr.)
1		1 - Inlet Pressure Gauge, 0-35"
		1 - Manifold Pressure Gauge, -5 to 15" wc
		1 - Motorized Backdraft Damper for A2-D Housing
		1 - Low Fire Start
2		1 - Grease Box
3		1 - Grease Box

FAN ACCESSORIES

FAN UNIT NO.	TAG	EXHAUST: GREASE CUP	GRAVITY DAMPER	WALL MOUNT	SUPPLY: SIDE DISCHARGE	GRAVITY DAMPER	MOTORIZED DAMPER	WALL MOUNT
1							YES	
2		YES						
3		YES						

CURB ASSEMBLIES

NO.	ON FAN	WEIGHT	ITEM	SIZE
1	# 1	76 LBS	Curb	31.000"W x 79.000"L x 20.000"H Insulated
2	# 2	41 LBS	Curb	26.500"W x 26.500"L x 20.000"H Insulated Vented Hinged
3	# 3	41 LBS	Curb	26.500"W x 26.500"L x 20.000"H Insulated Vented Hinged

FAN #1 A2-D.500-G15 - HEATER
1. DIRECT GAS FIRED HEATED MAKE UP AIR UNIT WITH 15" BLOWER
2. INTAKE HOOD WITH EZ FILTERS
3. DOWN DISCHARGE - AIR FLOW RIGHT -> LEFT
4. GAS PRESSURE GAUGE, 0-35", 2.5" DIAMETER, 1/4" THREAD SIZE
5. GAS PRESSURE GAUGE, -5 TO +15 INCHES WC., 2.5" DIAMETER, 1/4" THREAD SIZE
6. MOTORIZED BACK DRAFT DAMPER 22.75" X 24" FOR SIZE 2 STANDARD & MODULAR DIRECT FIRED HEATERS W/EXTENDED SHAFT, STANDARD GALVANIZED CONSTRUCTION, 3/4" REAR FLANGE, LF120S ACTUATOR INCLUDED
7. LOW FIRE START. ALLOWS THE BURNER CIRCUIT TO ENERGIZE WHEN THE MODULATION CONTROL IS IN A LOW FIRE POSITION.

SUPPLY SIDE HEATER INFORMATION:
WINTER TEMPERATURE = -20°F. TEMP. RISE = 95°F.
BTUs CALCULATED OFF ACTUAL AIR DENSITY
OUTPUT BTUs AT ALTITUDE OF 0.0 ft. = 405840
INPUT BTUs AT ALTITUDE OF 0.0 ft. = 441130

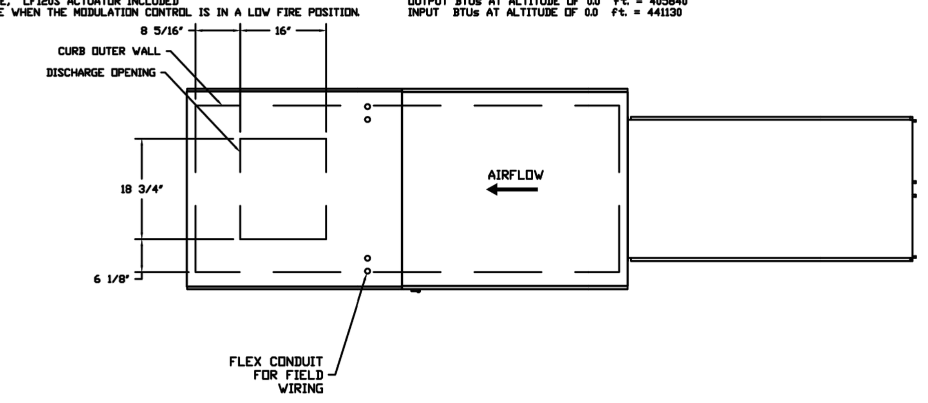

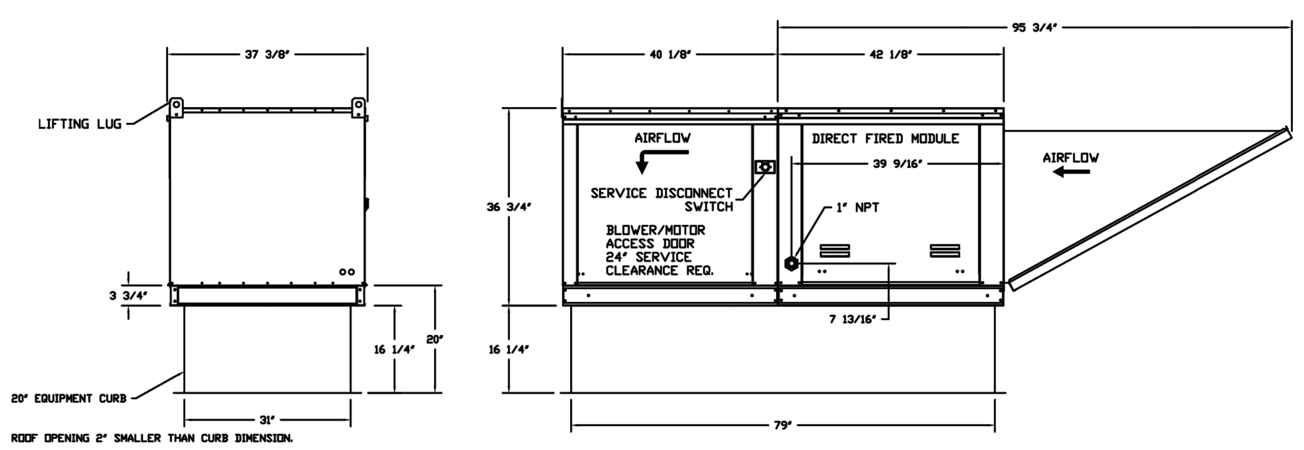

ELECTRICAL PACKAGES – Job#1873815

NO.	TAG	PACKAGE #	LOCATION	SWITCHES: LOCATION	SWITCHES: QUANTITY	OPTION	FANS CONTROLLED: TYPE	ø	H.P.	VOLT	FLA
1		SC-321110FP	Wall Mount In SS Box	SS Wall Mount Box	1 Light 1 Fan	Smart Controls Thermostatic Control	Supply	3	3.000	208	9.5
							Exhaust	3	1.000	208	3.3
							Exhaust	3	1.000	208	3.3

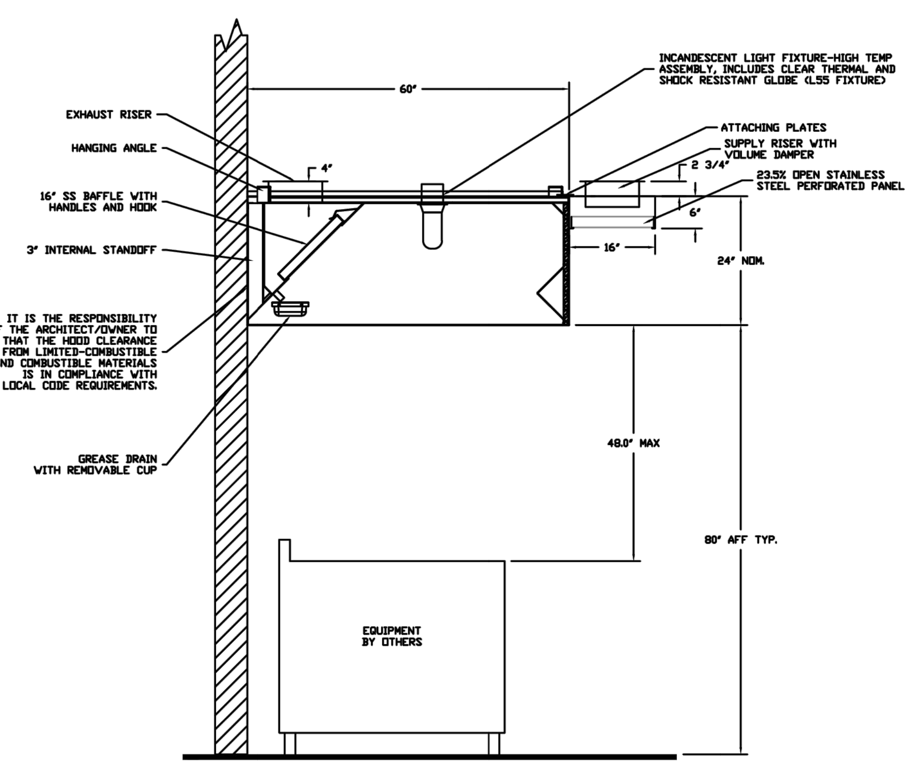

SECTION VIEW – MODEL 6024ND-2-PSP-F
HOODS – #1 (Left), #2 (Right)

FAN #2 NCA16FA - EXHAUST FAN

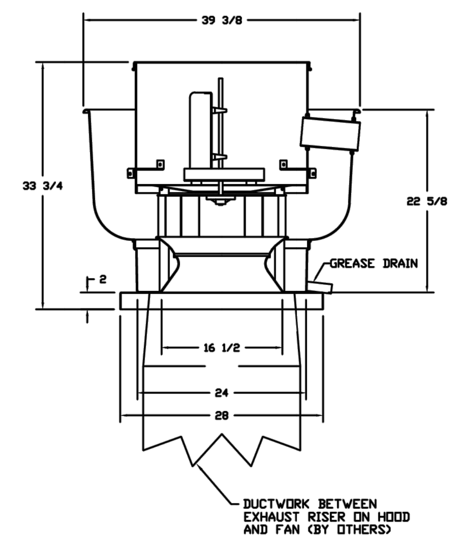

FEATURES:
- ROOF MOUNTED FANS
- RESTAURANT MODEL
- UL705 AND UL762
- AMCA SOUND AND AIR CERTIFIED
- WIRING FROM MOTOR TO DISCONNECT SWITCH
- WEATHERPROOF DISCONNECT
- HIGH HEAT OPERATION 300°F (149°C)
- GREASE CLASSIFICATION TESTING

NORMAL TEMPERATURE TEST
EXHAUST FAN MUST OPERATE CONTINUOUSLY WHILE EXHAUSTING AIR AT 300°F (149°C) UNTIL ALL FAN PARTS HAVE REACHED THERMAL EQUILIBRIUM, AND WITHOUT ANY DETERIORATING EFFECTS TO THE FAN WHICH WOULD CAUSE UNSAFE OPERATION.

ABNORMAL FLARE-UP TEST
EXHAUST FAN MUST OPERATE CONTINUOUSLY WHILE EXHAUSTING BURNING GREASE VAPORS AT 600°F (316°C) FOR A PERIOD OF 15 MINUTES WITHOUT THE FAN BECOMING DAMAGED TO ANY EXTENT THAT COULD CAUSE AN UNSAFE CONDITION.

OPTIONS
GREASE BOX

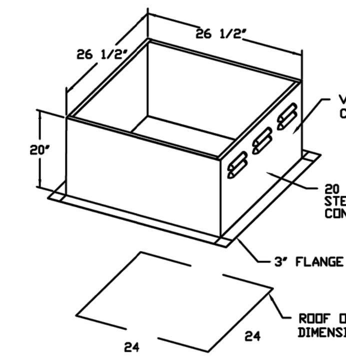

FAN #3 NCA16FA - EXHAUST FAN

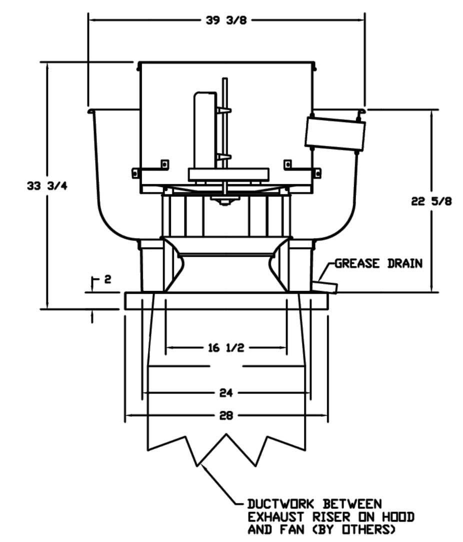

FEATURES:
- ROOF MOUNTED FANS
- RESTAURANT MODEL
- UL705 AND UL762
- AMCA SOUND AND AIR CERTIFIED
- WIRING FROM MOTOR TO DISCONNECT SWITCH
- WEATHERPROOF DISCONNECT
- HIGH HEAT OPERATION 300°F (149°C)
- GREASE CLASSIFICATION TESTING

NORMAL TEMPERATURE TEST
EXHAUST FAN MUST OPERATE CONTINUOUSLY WHILE EXHAUSTING AIR AT 300°F (149°C) UNTIL ALL FAN PARTS HAVE REACHED THERMAL EQUILIBRIUM, AND WITHOUT ANY DETERIORATING EFFECTS TO THE FAN WHICH WOULD CAUSE UNSAFE OPERATION.

ABNORMAL FLARE-UP TEST
EXHAUST FAN MUST OPERATE CONTINUOUSLY WHILE EXHAUSTING BURNING GREASE VAPORS AT 600°F (316°C) FOR A PERIOD OF 15 MINUTES WITHOUT THE FAN BECOMING DAMAGED TO ANY EXTENT THAT COULD CAUSE AN UNSAFE CONDITION.

OPTIONS
GREASE BOX

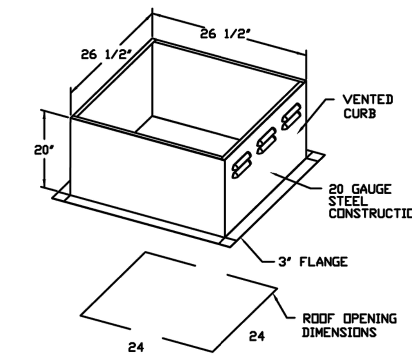

THIS DRAWING AND THE INFORMATION CONTAINED THEREIN ARE CONFIDENTIAL AND THE PROPERTY OF EAGLE DESIGN, LLC. NO USE OF, OR DISCLOSURE OF, THIS DRAWING OR THE INFORMATION CONTAINED THEREIN SHALL BE MADE WITHOUT THE SPECIFIC PRIOR WRITTEN CONSENT OF EAGLE DESIGN, LLC AND THE DRAWING SHALL BE RETURNED THERETO UPON REQUEST. ACCEPTANCE OF POSSESSION OF THIS DRAWING SHALL CONSTITUTE YOUR AGREEMENT TO THE FOREGOING TERMS AND CONDITIONS.

COPYRIGHT 2024© EAGLE DESIGN, LLC.

PRELIMINARY
NOT FOR CONSTRUCTION
10.15.24

EAGLE DESIGN, LLC
PO BOX 275
WALES, WISCONSIN 53183
phone: 414.550.1150
email: larry@eagledesignllc.biz
web: www.eagledesignllc.biz

CONTRACTOR
ZIG'S HEATING & A/C
2831 SOUTH 13th STREET
MILWAUKEE, WISCONSIN

PROJECT
KITCHEN VENTILATION for
NINO'S SOUTHERN SIDES
8775 N. PORT WASHINGTON ROAD
FOX POINT, WISCONSIN

PROJECT NUMBER
2436

DRAWN BY
LG

CHECKED BY
LG

REVISION

DATE
10.15.24

TITLE
KITCHEN VENTILATION

SHEET
KV2 of 3

Oculus Inc.
1 S. Memorial Dr., Suite 1500
St. Louis, MO 63102
314.367.6100
www.oculusinc.com

CASE Engineering Inc.
796 Merus Court
St. Louis, MO 63026
T 636.349.1600
F 636.349.1730
CERTIFICATE OF AUTHORITY NO. 4554-11

#	Description	Date

WISCONSIN
MATTHEW R. CASE
E-49681
ST. LOUIS MO
PROFESSIONAL ENGINEER
12/11/2024

These drawings/specifications are the property of Oculus Inc. They are furnished as contract documents only. The seal(s) and signature(s) apply only to the document to which they are affixed, and expressly disclaim any responsibility for all other plans, specifications, estimates, reports or other documents or instruments relating to or intended to be used for any part or parts of the architectural or engineering project. Additionally these drawings and seal(s) shall in no way convey or imply any type of warranty or certification relating to the performance of products and materials beyond those provided by their respective manufacturer.
© 2024 Oculus Inc.

- ISSUED FOR PERMIT

Client Approval

HOOD DETAILS

Project # 68423-WI01
Issue Date 12/11/2024
Scale AS INDICATED
Drawn by
Checked by

H1.0

COM*check* Software Version 4.1.5.5

Interior Lighting Compliance Certificate

Project Information

Energy Code:	2015 IECC
Project Title:	Nino's Southern Sides
Project Type:	Alteration

Construction Site:
Fox Point, WI

Owner/Agent:

Designer/Contractor:
Case Engineering Inc.
796 Merus Court
Fenton, MO 63026

Allowed Interior Lighting Power

A Area Category	B Floor Area (ft2)	C Allowed Watts / ft2	D Allowed Watts (B X C)
1-Common Space Types:Dining Area - Family Restaurant	206	0.89	183
2-Common Space Types:Food Preparation	1381	1.21	1671
		Total Allowed Watts =	1854

Proposed Interior Lighting Power

A Fixture ID : Description / Lamp / Wattage Per Lamp / Ballast	B Lamps/ Fixture	C # of Fixtures	D Fixture Watt.	E (C X D)
Common Space Types:Dining Area - Family Restaurant (206 sq.ft.)				
LED 1: B1: 2'x2' Lay-in: Other:	1	6	35	210
Common Space Types:Food Preparation (1381 sq.ft.)				
LED 2: B: 2'x4' Lay-in: Other:	1	22	50	1100
			Total Proposed Watts =	1310

Interior Lighting PASSES

Interior Lighting Compliance Statement

Compliance Statement: The proposed interior lighting alteration project represented in this document is consistent with the building plans, specifications, and other calculations submitted with this permit application. The proposed interior lighting systems have been designed to meet the 2015 IECC requirements in COM*check* Version 4.1.5.5 and to comply with any applicable mandatory requirements listed in the Inspection Checklist.

Name - Title

Signature

WISCONSIN PROFESSIONAL ENGINEER
MATTHEW R. CASE
E-49681
ST. LOUIS MO

12/11/2024
Date

COM*check* Software Version 4.1.5.5

Inspection Checklist

Energy Code: 2015 IECC

Requirements: 100.0% were addressed directly in the COM*check* software

Text in the "Comments/Assumptions" column is provided by the user in the COMcheck Requirements screen. For each requirement, the user certifies that a code requirement will be met and how that is documented, or that an exception is being claimed. Where compliance is itemized in a separate table, a reference to that table is provided.

Section # & Req.ID	Plan Review	Complies?	Comments/Assumptions
C103.2 [PR4][1]	Plans, specifications, and/or calculations provide all information with which compliance can be determined for the interior lighting and electrical systems and equipment and document where exceptions to the standard are claimed. Information provided should include interior lighting power calculations, wattage of bulbs and ballasts, transformers and control devices.	☐Complies ☐Does Not ☐Not Observable ☐Not Applicable	Requirement will be met.

Additional Comments/Assumptions:

1	High Impact (Tier 1)	2	Medium Impact (Tier 2)	3	Low Impact (Tier 3)

Section # & Req.ID	Rough-In Electrical Inspection	Complies?	Comments/Assumptions
C405.2.1 [EL15][1]	Lighting controls installed to uniformly reduce the lighting load by at least 50%.	☐Complies ☐Does Not ☐Not Observable ☐Not Applicable	Requirement will be met.
C405.2.1 [EL18][1]	Occupancy sensors installed in required spaces.	☐Complies ☐Does Not ☐Not Observable ☐Not Applicable	Requirement will be met.
C405.2.1, C405.2.2.3 [EL23][2]	Independent lighting controls installed per approved lighting plans and all manual controls readily accessible and visible to occupants.	☐Complies ☐Does Not ☐Not Observable ☐Not Applicable	Requirement will be met.
C405.2.2.1 [EL22][2]	Automatic controls to shut off all building lighting installed in all buildings.	☐Complies ☐Does Not ☐Not Observable ☐Not Applicable	Requirement will be met.
C405.2.3 [EL16][2]	Daylight zones provided with individual controls that control the lights independent of general area lighting.	☐Complies ☐Does Not ☐Not Observable ☐Not Applicable	**Exception:** Sidelight zones on first floor in Group A-2 and M occupancies.
C405.2.3, C405.2.3.1, C405.2.3.2 [EL20][1]	Primary sidelighted areas are equipped with required lighting controls.	☐Complies ☐Does Not ☐Not Observable ☐Not Applicable	**Exception:** Sidelight zones on first floor in Group A-2 and M occupancies.
C405.2.3, C405.2.3.1, C405.2.3.3 [EL21][1]	Enclosed spaces with daylight area under skylights and rooftop monitors are equipped with required lighting controls.	☐Complies ☐Does Not ☐Not Observable ☐Not Applicable	**Exception:** Requirement does not apply.
C405.2.4 [EL4][1]	Separate lighting control devices for specific uses installed per approved lighting plans.	☐Complies ☐Does Not ☐Not Observable ☐Not Applicable	Requirement will be met.
C405.2.4 [EL8][1]	Additional interior lighting power allowed for special functions per the approved lighting plans and is automatically controlled and separated from general lighting.	☐Complies ☐Does Not ☐Not Observable ☐Not Applicable	Requirement will be met.
C405.3 [EL6][1]	Exit signs do not exceed 5 watts per face.	☐Complies ☐Does Not ☐Not Observable ☐Not Applicable	Requirement will be met.

Additional Comments/Assumptions:

1	High Impact (Tier 1)	2	Medium Impact (Tier 2)	3	Low Impact (Tier 3)

Section # & Req.ID	Final Inspection	Complies?	Comments/Assumptions
C303.3, C408.2.5.2 [FI17][3]	Furnished O&M instructions for systems and equipment to the building owner or designated representative.	☐Complies ☐Does Not ☐Not Observable ☐Not Applicable	Requirement will be met.
C405.4.1 [FI18][1]	Interior installed lamp and fixture lighting power is consistent with what is shown on the approved lighting plans, demonstrating proposed watts are less than or equal to allowed watts.	☐Complies ☐Does Not ☐Not Observable ☐Not Applicable	*See the Interior Lighting fixture schedule for values.*
C408.2.5.1 [FI16][3]	Furnished as-built drawings for electric power systems within 90 days of system acceptance.	☐Complies ☐Does Not ☐Not Observable ☐Not Applicable	Requirement will be met.
C408.3 [FI33][1]	Lighting systems have been tested to ensure proper calibration, adjustment, programming, and operation.	☐Complies ☐Does Not ☐Not Observable ☐Not Applicable	Requirement will be met.

Additional Comments/Assumptions:

1	High Impact (Tier 1)	2	Medium Impact (Tier 2)	3	Low Impact (Tier 3)